CONTRACTOR(S) SHALL VERIFY EXISTING CONDITIONS AND CORRELATE DIMENSIONS PRIOR TO CONSTRUCTION OR FABRICATION OF THESE PROVISIONS. ANY DISCREPANCIES SHALL BE REPORTED TO THE ARCHITECT OF ANY DISCREPANCIES. COPYRIGHT SBLM PC. UNAUTHORIZED REPRODUCTION OR OTHER USE OF THIS DRAWING IS PROHIBITED.

petco THE HEALTH + WELLNESS CO.

COLUMBIA, STORE #9891-R2140 (RELO. #0855)

TENANT IMPROVEMENTS FOR A NEW PETCO STORE

400 N. STADIUM BLVD
COLUMBIA, MO 65203

ARCH. DWG. ABBREVIATIONS AND SYMBOLS

L.	ANGLE
℄	CENTERLINE
ABV	ABOVE
ACT.	ACOUSTICAL CEILING TILE
ADJ.	ADJUSTABLE
AHJ	AUTHORITY HAVING JURISDICTION
AL.	ALUMINUM
APPROX.	APPROXIMATE
ARCH.	ARCHITECTURAL
BD.	BOARD
BLDG.	BUILDING
BLK.	BLOCK
BM.	BEAM
B.O.	BOTTOM OF
CER.	CERAMIC
C.G.	CORNER GUARD
C.J.	CONTROL JOINT
CLG.	CEILING
CLR.	CLEAR
CMU	CONCRETE MASONRY UNIT
C.O.	CASED OPENING
COL.	COLUMN
CONC.	CONCRETE
CONT.	CONTINUOUS
COORD.	COORDINATE
C.T.	CERAMIC TILE
CTR.	CENTER
D	DEPTH
DBL.	DOUBLE
DEPT.	DEPARTMENT
D.F.	DRINKING FOUNTAIN
DET.	DETAIL
DIA.	DIAMETER
DIM.	DIMENSION
DISP.	DISPENSER
DN.	DOWN
DWG.	DRAWING
(E)	EXISTING
EA.	EACH
E.I.F.S.	EXTERIOR INSUL. & FINISH SYSTEM
E.J.	EXPANSION JOINT
EL.	ELEVATION
ELEC.	ELECTRICAL
EMER.	EMERGENCY
EQ.	EQUAL
EQMT.	EQUIPMENT
ETR	EXISTING TO REMAIN
EXST.	EXISTING
EXP.	EXPANSION
EXT.	EXTERIOR
F.D.	FLOOR DRAIN
F.S.	FLOOR SINK
F.E.	FIRE EXTINGUISHER
F.E.C.	FIRE EXTINGUISHER CABINET
FIN.	FINISH
FIXT.	FIXTURE
FL.	FLOOR
FLUOR.	FLUORESCENT
F.O.C.	FACE OF CONCRETE
F.O.F.	FACE OF FINISH
F.O.M.	FACE OF MASONRY
F.O.S.	FACE OF STUDS
FRMG.	FRAMING
FRP.	FIBER GLASS REINFORCED POLYESTER
F.R.T.	FIRE RETARDANT TREATED
FT.	FOOT OR FEET
FTG.	FOOTING
FURR.	FURRING
GA.	GAUGE
GALV.	GALVANIZED
GL.	GLASS
GR.	GRADE
GYP.	GYPSUM
GYP BD.	GYPSUM WALLBOARD
H.B.	HOSE BIBB
H.C.	HOLLOW CORE
H.D.	HEAVY DUTY
HDWD	HARDWOOD
H.M.	HOLLOW METAL
HORIZ.	HORIZONTAL
HGT.	HEIGHT
HSS	HOLLOW STEEL SECTION
I.D.	INSIDE DIMENSION
I.G.	INSULATING, GLASS
INSUL.	INSULATION
INT.	INTERIOR
JAN.	JANITOR
JT.	JOINT
JHA	JURISDICTION HAVING AUTHORITY
L.	LENGTH
LAM.	LAMINATE
LAV.	LAVATORY
LT.	LIGHT
MAX.	MAXIMUM
MDF	MEDIUM DENSITY FIBERBOARD
MECH.	MECHANICAL
MET.	METAL
MFR.	MANUFACTURER
MIN.	MINIMUM
MISC.	MISCELLANEOUS
M.O.	MASONRY OPENING
M.R.	MOISTURE RESISTANT
MTD.	MOUNTED
N.I.C.	NOT IN CONTRACT
NO.	NUMBER
NOM.	NOMINAL
N.T.S.	NOT TO SCALE
O.A.	OVERALL
O.C.	ON CENTER
O.D.	OUTSIDE DIMENSION
O.H.	OVERHANG
OPP.	OPPOSITE
OTS	OPEN TO STRUCTURE
PL.	PLATE
P. LAM.	PLASTIC LAMINATE
PLUMB.	PLUMBING
PLYWD.	PLYWOOD
P.T.	PRESSURE TREATED
PTD.	PAINTED
Q.T.	QUARRY TILE
R.	RISER
RAD.	RADIUS
R.D.	ROOF DRAIN
REF.	REFERENCE
REFR.	REFRIGERATOR
REINF	REINFORCED
REQD	REQUIRED
R.O.	ROUGH OPENING
R.T.U.	ROOF TOP UNIT (HVAC)
RWC	RAINWATER CONDUCTOR
S.C.	SOLID CORE
SCHED.	SCHEDULED
SHT.	SHEET
S.J.	SAWCUT JOINT
SIM.	SIMILAR
SPEC.	SPECIFICATION
S.ST.	STAINLESS STEEL
STD.	STANDARD
STL.	STEEL
STOR.	STORAGE
STRUC.	STRUCTURAL
SUSP.	SUSPENDED
TEL.	TELEPHONE
T&G	TONGUE AND GROOVE
T.G.	TEMPERED GLASS
T.G.P.	TEMPERED PRIVACY GLASS
T.G./SP.	TEMPERED SPANDREL GLASS
T.I.G.	TEMPERED INSULATING GLASS
THK.	THICK
T.O.	TOP OF
TS	TUBE STEEL
TYP.	TYPICAL
U.G.	UNDERGROUND
U.O.N.	UNLESS OTHERWISE NOTED
U.N.O.	UNLESS NOTED OTHERWISE
VCT	VINYL COMPOSITION TILE
VERT.	VERTICAL
VEST.	VESTIBULE
W/	WITH
WD	WOOD
W/O	WITHOUT
WP	WATERPROOF
WSCT.	WAINSCOT

000	COLUMN LINE IDENTIFICATION
00 / A0.0	DETAIL/DWG.
00 / A0.0	SECTION/DWG.
3 ## / A# 1	INTERIOR ELEVATIONS
00 / A0.0	ELEVATION/DWG.
+0'-0" FIN FL	ELEVATION
#	KEY NOTE
VB1	FINISH
P#	PARTITION TYPE
RETAIL XXX	ROOM & NUMBER
XX	DOOR NUMBER
FE	FIRE EXTINGUISHER
(XXXXX)	PROJECT MANUAL SECTION REF.
XXX.XX	MILLWORK ID TAG, REF. ON ENLARGED PLANS
	WALL BUMPER (10300)
	NEW PARTITIONS
	EXISTING WALLS
	EXISTING WALLS
	NEW PONY WALLS
	REMOVE / RELOCATE ELEMENT
	LIGHT FIXTURE IN SUSPENDED ACOUSTIC TILE CEILING, REF. ELEC.
	RECESSED DOWN LIGHT FIXTURE
	LIGHT FIXTURE, REF. ELEC.
	NARROW STRIP LIGHT WITH REFLECTOR, REF. ELEC.
	EXIT SIGN
	EXIT SIGN / EMERGENCY LIGHT COMBO FIXTURE
	EMERGENCY LIGHT FIXTURE
	EXTERIOR WALL MOUNTED LIGHT FIXTURE
	EXTERIOR CANOPY DOWN LIGHT FIXTURE
	EXTERIOR WALL MOUNTED GOOSENECK LIGHT FIXTURE
	PENDANT LIGHTS
	TRACK LIGHTS
	UNDER CABINET TASK LIGHT
	CEILING MOUNTED SURGICAL OVERHEAD LIGHT (10300) WITH ADJUST. ARMATURE MAX REACH DISTANCE SHOWN DASHED
	CEILING MOUNTED WET TABLE OVERHEAD LIGHT (10300) WITH ADJUST. ARMATURE MAX REACH DISTANCE SHOWN DASHED

PROJECT TEAM

Tenant (Owner in Fee)
Petco Animal Supplies Stores, Inc.
654 Richland Hills Drive
San Antonio, Texas 78245
T: 760.644.5866
Contact: Sharon Siekierski, Construction Manager
sharon.siekierski@petco.com

Architect (Tenant Improvement)
SBLM
11430 North Kendall Drive, Suite 310
Miami, FL 33176
T: 305.412.9187 F: 305.412.6731
Contact: Stephen Hartley, Project Manager
shartley@sblm.com

Mechanical/Plumbing/Electrical Engineer (Tenant Improvement)
Acertus Consulting Group, LLC
14817 West 95th Street
Lenexa, KS 66215
T: 913.322.5150 F: 913.322.5155

Structural Engineer (Tenant Improvement)
BSE Structural Engineers, LLC
11320 West 79th Street
Lenexa, KS 66214
T: 913.492.7400
Contact: Kevin S. Boehringer, P.E., S.E.
kboehringer@bsestructural.com

SITE KEY PLAN

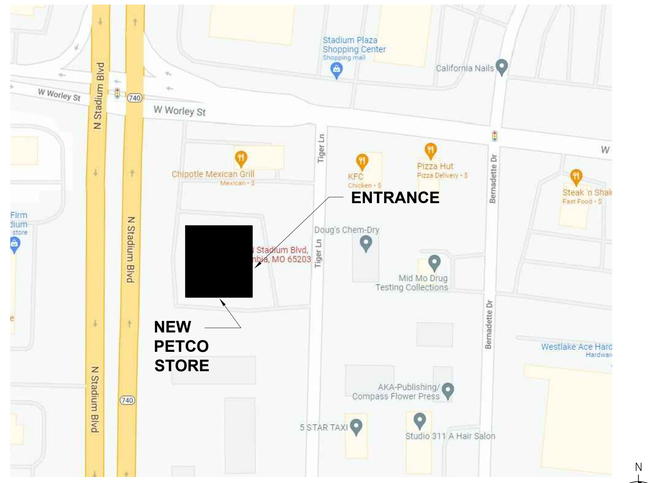

CODE DATA

≡APPLICABLE CODES:
BUILDING/STRUCTURAL CODE: 2018 INTERNATIONAL BUILDING CODE
FIRE CODE: 2018 INTERNATIONAL FIRE CODE
PLUMBING CODE: 2018 INTERNATIONAL PLUMBING CODE
MECHANICAL CODE: 2018 INTERNATIONAL MECHANICAL CODE
ELECTRICAL CODE: 2017 NATIONAL ELECTRICAL CODE
ENERGY CODE: 2018 INTERNATIONAL ENERGY CONSERVATION CODE
ACCESSIBILITY CODE: 2010 ADA STANDARDS FOR ACCESSIBLE DESIGN; 2018 ACCESSIBILITY CODE

OCCUPANCY GROUP (MIXED):
M MERCANTILE and B BUSINESS (SECTION 309)

BUILDING SHELL TYPE of CONSTRUCTION (TABLE 601): TYPE II–B
FBCEB 301.1.2: WORK AREA COMPLIANCE METHOD, ALTERATION LEVEL II (SECTION 504)

ALLOWABLE AREAS (W/ FULLY SPRINKLERED SYSTEM (TABLE 506.2):	ALLOWABLE BUILDING AREA: 50,000 SF ACTUAL BUILDING AREA (BOMA): 13,539 SF
FIRE SEPARATION ASSEMBLY BETWEEN GROUP M TENANTS, W/ EXCEPTION FOR FULLY SPRINKLERED SYSTEM (TABLE 508.3.3; TABLE 508.4): NONE	
EXIT ACCESS TRAVEL DISTANCE (TABLE 1017.2):	REQUIRED (W/ SPRINKLER SYSTEM): 250'–0" PROVIDED: SEE PLAN
DEAD–END CORRIDOR MAX LIMIT (SECTION 1020.4, W/ AUTOMATIC SPRINKLER SYSTEM): 50'–0"	
COMMON PATH MAX LIMIT (TABLE 1006.2.1): 75'–0"(M) AND 100'(B)	

LIFE SAFETY OCCUPANT LOAD (IFC TABLE 1004.5):[GROSS]; EGRESS WIDTH (IFC TABLE 1005.3.2, EX 1); NUMBER of EXITS (1006) ACCESSIBLE (SECTION 1007.1)

FUNCTION OF SPACE	AREA	OCCUPANT LOAD FACTOR	OCCUPANT LOAD	EGRESS CAPACITY FACTOR	REQUIRED	PROVIDED	NUMBER of EXITS (1006) ACCESSIBLE (SECTION 1007.1) REQUIRED	PROVIDED
(M) RETAIL	9,744 SF	60	162	0.15	24.36"	105.50"	2	2
(B) GROOMING	882 SF	150	6	0.15	0.88"		1	1 (THROUGH RETAIL)
(B) VET CARE (BOMA)	2,011 SF	150	13	0.15	2.01"	33.75"	1	1
(M) STOCK	901 SF	300	3	0.15	0.45"	33.75"	1	2
TOTAL:	13,539 SF		185	0.15	27.70"	173.00"	2 ACCESSIBLE	

PLUMBING FIXTURE OCCUPANT LOAD (IBC TABLE 1004.5; IPC TABLE 403.1):[GROSS]

FUNCTION OF SPACE	AREA	OCCUPANT LOAD FACTOR	OCCUPANT LOAD	FIXTURE TYPE	REQUIRED / SEX	PROVIDED
(M) RETAIL	9,744 SF	60	162			
(B) GROOMING	882 SF	150	6			
(B) VET CARE (BOMA)	2,011 SF	150	13			
(M) STOCK / PRE-SALES	901 SF	300	3			
TOTAL:	13,539 SF		185			
1 EACH SEX PER 500 PERSONS				WATER CLOSETS	0.18	MEN = 1; WOMEN = 1; ALL GENDER = 1
1 EACH SEX PER 750 PERSONS				LAVATORIES	0.12	MEN = 1; WOMEN = 1; ALL GENDER = 1
1 PER 1000 PERSONS				DRINKING FOUNTAINS	0.18	2
1 SERVICE SINK REQUIRED				SERVICE SINKS	1	2

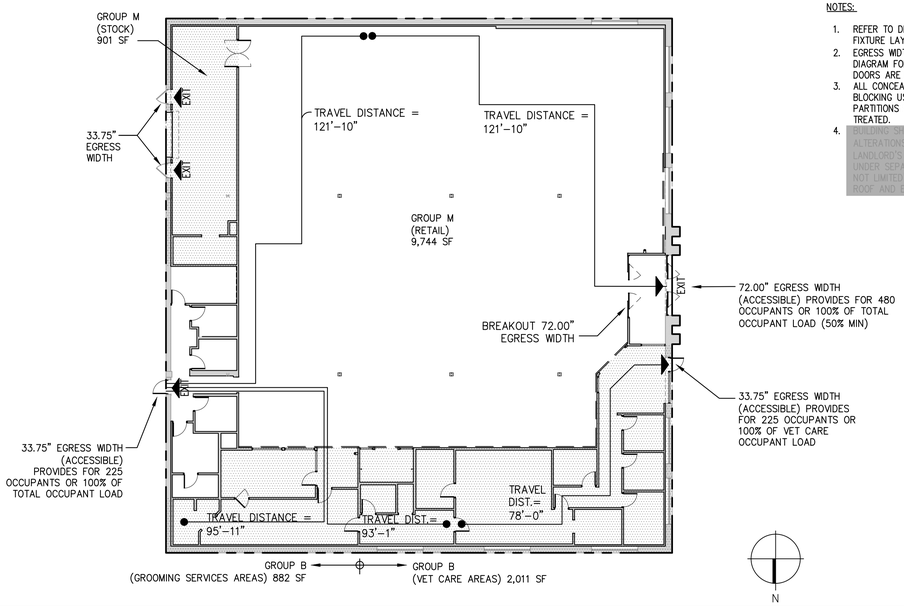

NOTES:

1. REFER TO DRAWING FP1 FOR RETAIL STORE FIXTURE LAYOUT.
2. EGRESS WIDTHS SHOWN ON 'CODE DATA' DIAGRAM FOR AUTOMATIC SLIDING ENTRANCE DOORS ARE FOR BREAKOUT DOOR PANELS.
3. ALL CONCEALED WOOD AND PLYWOOD BLOCKING USED IN TENANT SPACE PARTITIONS SHALL BE FIRE RETARDANT TREATED.
4. BUILDING SHELL DESIGN DETAILS AND ALTERATIONS ARE BY OTHERS / BY LANDLORD'S BUILDING ARCHITECT, UNDER SEPARATE CONTRACT INCLUDING BUT NOT LIMITED TO STRUCTURAL REINFORCING OF ROOF AND EXTERIOR WALL OPENINGS. NOT APPLICABLE

PROTOTYPE VERSION: NEXUS SCHEME 3, EXHIBIT B 21Q4.00

PETCO SD	FP ISSUE DATES	PETCO SD	FP ISSUE DATES	PETCO SD	FP ISSUE DATES	PETCO SD	FP ISSUE DATES	PETCO SD	FP ISSUE DATES
C. DICICCO	11/05/21								
C. DICICCO	01/03/22								
C. DICICCO	01/13/22								

DRAWING INDEX

SHEET NO.	DRAWING TITLE	FIRST REVIEW CD SET 11/16/21	COMPREHENSIVE REVIEW CD SET 12/06/21	FINAL REVIEW CD SET 12/22/21	BID SET 01/07/22	PERMIT FILING SET 02/07/22	ADDENDUM 01 02/17/22
A0.1	Code Data and Project Data	◇	◇	◇	◇	◇	◇
FP1	Store Fixture Plan	◇	◇	◇	◇	◇	◇
A0.2	NOT USED						
A0.3	Vendor and Contractor Responsibilities	◇	◇	◇	◇	◇	
A0.4	Vendor and Contractor Responsibilities	◇	◇	◇	◇	◇	
A1.1	Demolition Plan		◇	◇	◇	◇	◇
A1.2	Inter. Wall Verification Plan		◇	◇	◇	◇	
A2.1	Architectural Floor Plan	◇	◇	◇	◇	◇	◇
A2.2	Architectural Floor Finish Plan	◇	◇	◇	◇	◇	
A2.3	Finish Schedule and Finish Legend	◇	◇	◇	◇	◇	
A2.4	Architectural Reflected Ceiling Plan	◇	◇	◇	◇	◇	◇
A2.5A	Millwork and Blocking Plan		◇	◇	◇	◇	
A2.5B	Millwork and Blocking Schedules		◇	◇	◇	◇	
A2.6	Architectural Roof Plan		◇	◇	◇	◇	◇
A3.1	Door Schedule and Door Types		◇	◇	◇	◇	◇
A3.2	Door and Door Sign Details		◇	◇	◇	◇	◇
A4.1A	Exterior Facade Elevations	◇	◇	◇	◇	◇	◇
A4.1B	Exterior Facade Elevations		◇	◇	◇	◇	◇
A5.1	Exterior Wall Sections		◇	◇	◇	◇	◇
A5.2	Wall Sections at Entry Vestibule		◇	◇	◇	◇	◇
A5.3	Interior Wall Sections		◇	◇	◇	◇	
A5.4	Interior Partition Types and Details		◇	◇	◇	◇	
A5.5	Interior Partition Types and Details		◇	◇	◇	◇	
A5.6	Partition Framing Details		◇	◇	◇	◇	
A5.7	Interior Wall Sections and Wall Details		◇	◇	◇	◇	
A6.1	Architectural Exterior Details		◇	◇	◇	◇	◇
A7.1A	Architectural Large Scale Floor Plan		◇	◇	◇	◇	◇
A7.1B	Architectural Large Scale Floor Plan		◇	◇	◇	◇	◇
A7.2	Loading Area Floor Plan and Section		◇	◇	◇	◇	◇
A8.1	Architectural Interior Details		◇	◇	◇	◇	
A8.2	Architectural Interior Details		◇	◇	◇	◇	
A8.3	NOT USED						
A8.4	Architectural Interior Details		◇	◇	◇	◇	
A8.5A	Architectural Interior Details		◇	◇	◇	◇	
A8.5B	Architectural Interior Details		◇	◇	◇	◇	
A8.6	Architectural Interior Details		◇	◇	◇	◇	
A8.7	Architectural Interior Details		◇	◇	◇	◇	◇
A9.1	Back of House Area Interior Elevations		◇	◇	◇	◇	◇
A9.2	Grooming Area Interior Elevations		◇	◇	◇	◇	
A9.3	Retail Area Interior Elevations	◇	◇	◇	◇	◇	
A9.4	Paint Stencil Elevations		◇	◇	◇	◇	
A9.5	Self–Wash Enlarged Plan and Elevations		◇	◇	◇	◇	◇
A9.6	NOT USED						
A9.7	Vet Care Area Interior Elevations		◇	◇	◇	◇	
A9.8	Vet Care Area Interior Elevations		◇	◇	◇	◇	
S0.0	General Notes		◇	◇	◇	◇	
S1.1	Roof Framing Plan		◇	◇	◇	◇	
S2.1	Typical Framing Details		◇	◇	◇	◇	
S2.2	Typical Details		◇	◇	◇	◇	
S2.3	Typical Details		◇	◇	◇	◇	
PME1.1	Plumbing, Mechanical, Electrical Gen. Info		◇	◇	◇	◇	
P1.1	Plumbing General Info & Schedules		◇	◇	◇	◇	
P1.2	Plumbing General Info & Schedules		◇	◇	◇	◇	
P2.1	Plumbing Plan		◇	◇	◇	◇	
P3.1	Sanitary Large Scale Plans & Details		◇	◇	◇	◇	
P3.2	Water Large Scale Plans & Details		◇	◇	◇	◇	
P3.3	San. and Water Enlarged Plans & Details		◇	◇	◇	◇	
P4.1	Plumbing Riser Diagram & Details		◇	◇	◇	◇	
M1.1	Mechanical General Info & Schedules		◇	◇	◇	◇	
M2.1	Mechanical Plan		◇	◇	◇	◇	
M3.1	Mechanical Large Scale Plans & Details		◇	◇	◇	◇	
M3.2	Mechanical Large Scale Plans & Details		◇	◇	◇	◇	
M4.1	Mechanical Details		◇	◇	◇	◇	
F1.1	Fire Suppression Gen. Info. & Schedules		◇	◇	◇	◇	
E1.1	Electrical General Info & Schedules		◇	◇	◇	◇	
E1.2	Panel Schedules		◇	◇	◇	◇	
E1.3	Electrical Single Line Diagram & Details		◇	◇	◇	◇	
E2.1	Electrical Lighting Plan		◇	◇	◇	◇	
E2.2	Electrical Power Plan		◇	◇	◇	◇	
E2.3	Sound and Communication System		◇	◇	◇	◇	
E2.4	Security System Plan		◇	◇	◇	◇	
E2.5	Energy Management System Plan		◇	◇	◇	◇	
E3.1	Electrical Large Scale Plans & Details		◇	◇	◇	◇	
E3.2	Electrical Large Scale Plans & Details		◇	◇	◇	◇	
E3.3	Electrical Large Scale Plans & Details		◇	◇	◇	◇	
EMS1.1	Energy Mngmt. System Info & Details		◇	◇	◇	◇	

SBLM

Owner
Petco Animal Supplies Stores, Inc.
654 Richland Hills Drive
San Antonio, Texas 78245
T: 760.644.5866
Contact: Sharon Siekierski, Construction Manager
sharon.siekierski@petco.com

petco

Architect
SBLM
11430 North Kendall Drive, Suite 310
Miami, FL 33176
T: 305.412.9187 F: 305.412.6731
Contact: Stephen Hartley, Project Manager
shartley@sblm.com

MEP Engineer
Acertus Consulting Group, LLC
14817 West 95th Street
Lenexa, KS 66215
T: 913.322.5150 F: 913.322.5155

Structural Engineer
BSE Structural Engineers, LLC
11320 West 79th Street
Lenexa, KS 66214
T: 913.492.7400
Contact: Kevin S. Boehringer, P.E., S.E.
kboehringer@bsestructural.com

Distribution:	*Date:*
EXISTING CONDITIONS PLAN	09-16-21
FIRST REVIEW CD SET	11-16-21
A&E INTERNAL COORDINATION CD SET	11-30-21
COMPREHENSIVE REVIEW CD SET	12-08-21
FINAL REVIEW CD SET	12-22-21
BID SET	01-07-22
PERMIT FILING SET	02-07-22
△1 ADDENDUM 01	02-17-22

Seal & Signature

Project
Columbia, MO
400 N Stadium Blvd.
Columbia, MO 65203

Petco Store Reloc. No. 0855 9891-R2140 — *Project No. 021156 / 21Q4.00*
Drawn By: HM/DR — *Checked By: JI*

CODE DATA AND PROJECT DATA

A0.1

THE FOLLOWING APPLIES TO ALL ARCHITECTURAL SHEETS:
SBLM makes no warranties, either expressed or implied, of the accuracy of these drawings. The user is warned that while all the digital CAD data appears to be extremely accurate, this apparent accuracy is an artifact of the techniques used to generate it and is no way to imply actual accuracy. The user of this data takes full responsibility for the accuracy and correctness of all measurements, areas, overlays, and other information derived from the use of this data. The user agrees to indemnify and hold SBLM harmless from any damage, liability or cost, including but not limited to reasonable attorney's fees and cost of defense, arising from such use, or from any changes made by these files by anyone other than SBLM, or from any reuse from the files and data without the prior written consent of SBLM. User confirms acceptance of the above conditions, and agrees, to the fullest extent of the law, to indemnify and hold SBLM harmless from any damage, liability or cost, including but not limited to reasonable attorney's fees and cost of defense, arising from such use, or from any changes made by these files by anyone other than SBLM, or from any reuse from the files and data without the prior written consent of SBLM.

FILENAME\\sbm-fiscal\f\data\Projects\2021\021156\Drawings\Current Set\01_021156_A0.1.dwg | PLOTTED BY:Mon, Harold | DATE: February 25, 2022

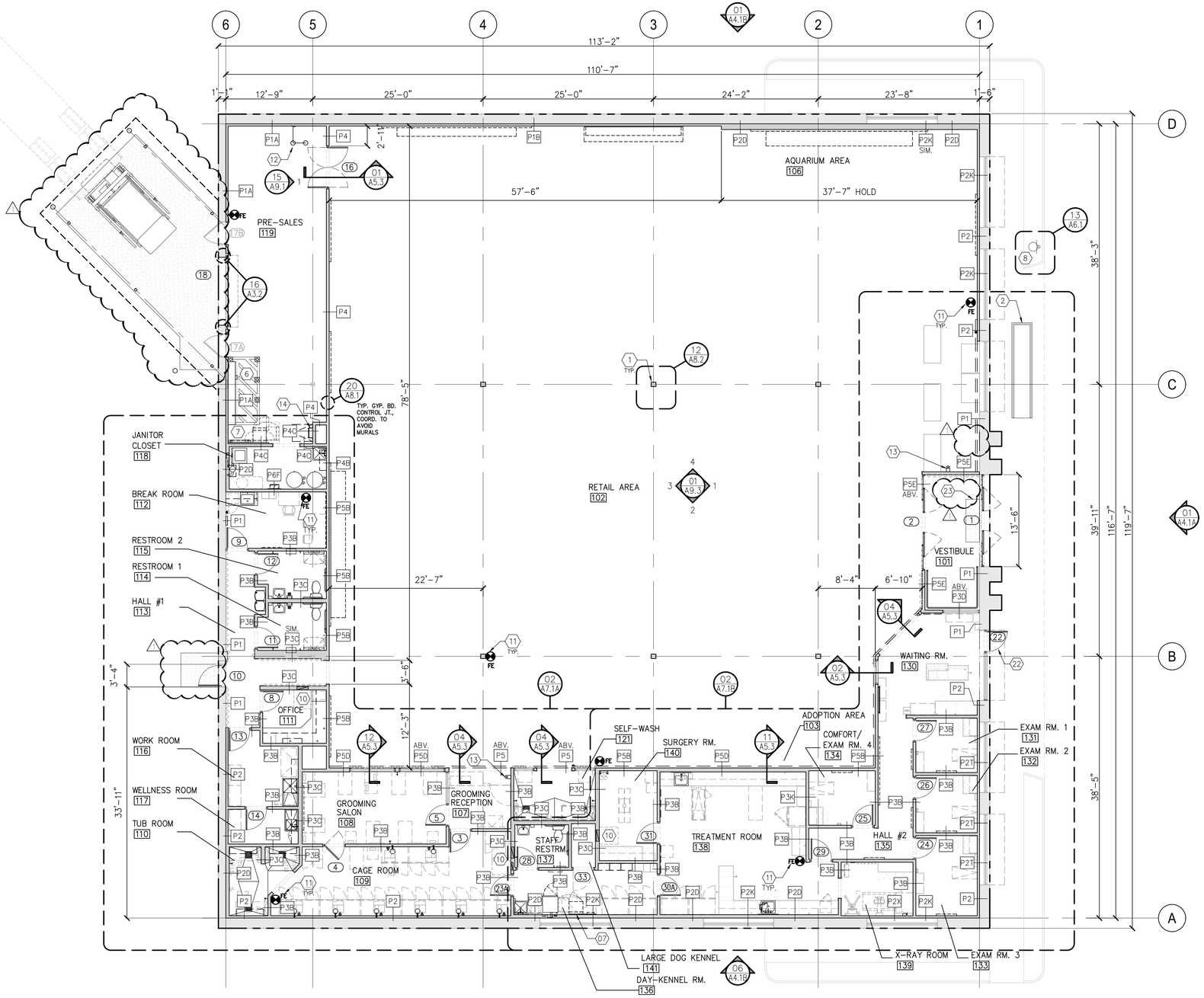

MEDICAL GAS NOTE:
THIS FACILITY SHALL NOT STORE MORE THAN 8 E-CYLINDERS (25 CF EA./200 CF TOTAL) OF MEDICAL OXYGEN TANKS ON-SITE AT ANY TIME FOR VETERINARY PROCEDURES. TANKS HAVE CGA 870 CONNECTION VALVE YOKES AND ARE SECURED IN A RACK SPECIFICALLY DESIGNED FOR E-CYLINDERS IN THE SURGERY ROOM. CENTRALIZED/PLUMBED MEDICAL GAS IS NOT USED. NO OTHER MEDICAL RELATED GAS SUPPLY IS USED.

NOTE:
THE CONTRACTOR SHALL OBTAIN AN ADA INSPECTION, SEE GENERAL NOTE "I" AND PROJECT MANUAL SECTION 01700

NOTE:
IN JURISDICTIONS WHERE STATE MANDATED SITE OBSERVATIONS ARE REQUIRED, GC SHALL PROVIDE 3 WEEKS MINIMAL NOTICE TO ARCHITECT FOR TRAVEL ARRANGEMENTS

01 FLOOR PLAN

SCALE: 1/8" = 1'-0" REF.:

KEY NOTES (NOT ALL MAY BE APPLICABLE) (#) :

1. COLUMN COVERS FOR ALL FREESTANDING COLUMNS IN RETAIL AREA, TYP. REF. DET. 12/A8.2
2. EXTERIOR CART CORRAL (10300) COORDINATE FINAL LOCATIONS W/ PETCO CONSTRUCTION MANAGER
3. ACCESSIBLE CURB RAMP, N.I.C., UNDER SEPARATE PERMIT FOR EXTERIOR ALTERATIONS — N/A
4. DUMPSTER ENCLOSURE, COORDINATE FINAL LOCATIONS W/ PETCO PROJECT MANAGER, N.I.C., UNDER SEPARATE PERMIT FOR EXTERIOR ALTERATIONS — N/A
5. FRAMING OF PLATFORM DECK ABOVE, SEE ENLARGED PLAN ON A7.1B — N/A
6. ELECTRICAL GEAR, DASHED LINES INDICATE MINIMAL CLEARANCES REQUIRED
7. WALL MOUNTED DATA RACK ABOVE
8. PREFABRICATED "PET CLEAN UP STATION" (10300), TO BE LOCATED IN A LANDSCAPE AREA NEAR STORE ENTRY, COORDINATE FINAL LOCATION WITH PETCO CONSTRUCTION MANAGER.
9. [illegible] SECTIONAL DOOR, SEE ENLARGED PLAN — N/A
10. ELECTRICAL PANEL WITH 30"X36" MIN. CLEAR FLOOR AREA IN FRONT OF PANEL
11. 3A-40B:C FIRE EXTINGUISHER W/WALL BRACKET MOUNTED AT 40" AFF & SIGN (10300), BOTTOM OF EXTINGUISHER/LEADING EDGE SHALL BE LESS THAN 27" AFF, ALL EXTINGUISHERS SHALL BE PROPERLY TAGGED WITH ACCURATE AND UP-TO-DATE INFORMATION AND SHALL MEET OR EXCEED ANY ADDITIONAL MIN. REQUIREMENTS BY JURISDICTION'S FIRE MARSHAL
12. FIRE RISER LOCATION WITH DASHED LINES TO INDICATE MINIMAL CLEARANCES REQUIRED
13. DOOR CLOSER BUTTON, SEE DOOR 2 ON A3.1, DOOR SCHEDULE AND ELECTRICAL DRAWINGS
14. LADDER, SEE ENLARGED PLAN
15. DOORS SHALL PERMANENTLY BE CLOSED POSITION, REMOVE HARDWARE AND PROVIDE CONCEALED PLATES AT REMOVED HARDWARE WHERE REQUIRED — N/A
16. VENDOR PROVIDED CABINETS AND GATE INSTALLED BY CONTRACTOR — N/A
17. EXISTING CONSTRUCTION, SHOWN FOR REFERENCE ONLY — N/A
18. KNOX BOX (10300) — N/A
19. EXISTING RAIN WATER LEADER — N/A
20. EXISTING FIRE EXTINGUISHER — N/A
21. TEMP. CONSTRUCTION DUST CURTAIN, SEE PETCO CM — N/A
22. PRIOR TO DEMOLITION, CONTRACTOR SHALL VERIFY IN FIELD INTERIOR FINISHED FLOOR ELEVATION IS SAME AS EXTERIOR SIDEWALK ELEVATION AT PROPOSED EXTERIOR DOOR, NOTIFY ARCHITECT AND PETCO CM IMMEDIATELY IN WRITING IF ELEVATIONS ARE NOT EQUAL
23. INFILL CONCRETE SLAB. SEE STRUCTURAL DWS.

GENERAL NOTES:

A. INTERIOR PARTITION DIMENSIONS ARE TO FACE OF FINISH, TYPICAL. SOME SPECIAL PARTITIONS ARE DIMENSIONED TO CENTER.

B. VERIFY MEASUREMENTS WITH CORRESPONDING CONSTRUCTED OR EXISTING CONDITIONS PRIOR TO PROCEEDING WITH THE WORK, AND NOTIFY THE ARCHITECT IMMEDIATELY OF SIGNIFICANT DISCREPANCIES USING THE "CONTRACTOR REQUEST FOR INFORMATION" FORM (01200) AND SUPPLEMENTARY CONTRACTOR DETAILS AS REQUIRED.

C. FINISH ELEVATIONS REFERENCED ON ARCHITECTURAL DRAWINGS ARE DATUM ELEVATIONS ABOVE THE FINISH FLOOR ELEVATION. THE CONTRACTOR MUST COORDINATE DATUM-BASED ARCHITECTURAL ELEVATIONS SHOWN WITH SITE-SPECIFIC ELEVATIONS SHOWN ON CIVIL DRAWINGS (IF APPLICABLE).

D. PROVIDE RODENT BARRIER HARDWARE CLOTH (05500) 48" HGT. NOM., ON FRAMING BEHIND SHEATHING, FOR ALL NEW PERIMETER PARTITIONS THAT ARE ADJACENT TO/ABUTTING SHELL EXTERIOR WALLS OR COMMON WITH SHELL TENANT SEPARATION ASSEMBLIES.

E. WHERE NEW WALL TILE IS TO BE INSTALLED ON AN EXISTING NON-RATED WALL IN WET AREAS DESIGNATED TO REMAIN, REMOVE EXISTING GYP. BD. SHEATHING AND INSTALL NEW SHEATHING AS NOTED ON FINISHED SCHEDULE

F. REFER TO SECTION 09260 TABLE "NONSTRUCTURAL LIMITING HEIGHTS" FOR PARTITION STANDARDS BASED ON DEFLECTION LIMIT L/240, UNIFORM 5 PSF LATERAL LOAD. 25 GA METAL WALL FRAMING IS THE MIN. GAUGE POSSIBLE. HEAVIER GAUGE FRAMING AND DIAG. "KICKERS" MAY BE REQUIRED DEPENDING ON FIELD CONDITIONS AND FRAMING HEIGHTS.

G. EXPOSED SURFACE MOUNTED ELECTRICAL CONDUITS, PLUMBING, UTILITIES, ETC. ON WALLS SHALL NOT BE PERMITTED IN CUSTOMER AREAS WITHOUT WRITTEN APPROVAL FROM PETCO CM.

H. ALL PLATFORM AND ROOF LADDERS SHALL COMPLY WITH OSHA REQUIREMENTS INCLUDING BUT NOT LIMITED TO SAFETY CAGES

I. WITHIN 14 DAYS OF END OF CONSTRUCTION, THE CONTRACTOR SHALL OBTAIN AN INSPECTION AND A CERTIFICATION FROM A NATIONALLY RECOGNIZED ADA INSPECTION COMPANY AND SUBMIT THE CERTIFICATION TO THE PETCO CONSTRUCTION MANAGER AND THE ARCHITECT OF RECORD. THE CERTIFICATION SHALL STATE THE JOB SITE HAS BEEN INSPECTED AT ALL NEW CONSTRUCTION AREAS AS DEFINED BY THE SCOPE OF WORK OF THE CONTRACT. THE CERTIFICATION SHALL ALSO STATE IF SAID AREAS MEET THE CURRENT ADA STANDARDS HAVING JURISDICTION AND LOCAL AMENDMENTS OR PROVIDE A COMPREHENSIVE LIST OF ALL NON-CONFORMING ELEMENTS SUPPORTED WITH PHOTOS, DRAWINGS AND SKETCHES. REMEDIES FOR ALL NON-CONFORMING ELEMENTS SHALL BE REVIEWED WITH THE PETCO CONSTRUCTION MANAGER AND ARCHITECT OF RECORD TO DETERMINE A COURSE OF CORRECTIVE ACTION. ALL REMEDIES SHALL BE DOCUMENTED BY PHOTOGRAPHS AND ANY ADDITIONAL MEANS AS REQUESTED BY THE INSPECTION COMPANY FOR A FINAL CERTIFICATE TO BE APPROVED AND ISSUED (01700).

SBLM

Owner
Petco Animal Supplies Stores, Inc.
654 Richland Hills Drive
San Antonio, Texas 78245
T: 760.644.5866
Contact: Sharon Siekierski, Construction Manager
sharon.siekierski@petco.com

petco

Architect
SBLM
11430 North Kendall Drive, Suite 310
Miami, FL 33176
T: 305.412.9187 F: 305.412.6731
Contact: Stephen Hartley, Project Manager
shartley@sblm.com

MEP Engineer
Acertus Consulting Group, LLC
14817 West 95th Street
Lenexa, KS 66215
T: 913.322.5150 F: 913.322.5155

Structural Engineer
BSE Structural Engineers, LLC
11320 West 79th Street
Lenexa, KS 66214
T: 913.492.7400
Contact: Kevin S. Boehringer, P.E., S.E.
kboehringer@bsestructural.com

Distribution:	Date:
EXISTING CONDITIONS PLAN	09-16-21
FIRST REVIEW CD SET	11-16-21
A&E INTERNAL COORDINATION CD SET	11-30-21
COMPREHENSIVE REVIEW CD SET	12-08-21
FINAL REVIEW CD SET	12-22-21
BID SET	01-07-22
PERMIT FILING SET	02-07-22
1 ADDENDUM 01	02-17-22

Seal & Signature

Project
Columbia, MO
400 N Stadium Blvd.
Columbia, MO 65203

Petco Store Reloc. No. 0855 9891-R2140 — *Project No. 021156 / 21Q4.00*
Drawn By: HM/DR — *Checked By: JI*

ARCHITECTURAL FLOOR PLAN

A2.1

CONTRACTOR(S) SHALL VERIFY EXISTING CONDITIONS AND CORRELATE DIMENSIONS PRIOR TO CONSTRUCTION. DO NOT SCALE DRAWINGS. ANY DISCREPANCIES MUST BE REPORTED TO THE ARCHITECT OF ANY DISCREPANCIES. COPYRIGHT SBLM PC. UNAUTHORIZED REPRODUCTION OR OTHER USE OF THIS DRAWING IS PROHIBITED.

THE FOLLOWING APPLIES TO ALL ARCHITECTURAL SHEETS:
The computer aided drawing (CAD) data contained on these files is provided as a convenience to the recipient (the "User" only). The CAD data was prepared as a SBLM internal working document. As such, it may be incomplete, contain unintentional inaccuracies, or be partially incomplete. SBLM makes no warranties, either expressed or implied, of the accuracy of these drawings. The user is warned that while all the digital CAD data appears to be extremely accurate, this appearance accuracy is an artifact of the techniques used to generate it, and is no way to imply actual accuracy. The user of this data takes full responsibility for the accuracy and correctness of all measurements, areas, inventories, etc. extracted from this data either manually or with the use of a computer. The user is advised that any transaction of CAD data from one computer system or environment to another may result in the loss of data, the introduction of computer viruses, and other anomalies. The User agrees to indemnify and hold SBLM harmless from any damage, liability or cost, including but not limited to reasonable attorney's fees and cost of defense, arising from such use, or from any changes made by these files by anyone other than SBLM, or from any reuse from the files and data without the prior written consent of SBLM. User confirms acceptance of the above conditions, and agrees, to the fullest extent of the law, to indemnify and hold SBLM harmless from any damage, liability or cost, including but not limited to reasonable attorney's fees and cost of defense, arising from any reuse of the files without the prior written consent of SBLM.

FILENAME:V:\Projects\2021\021156\Drawings\Current Set\06-021156_A2-1.dwg | PLOTTED BY:Mon, Harold | DATE: February 25, 2022

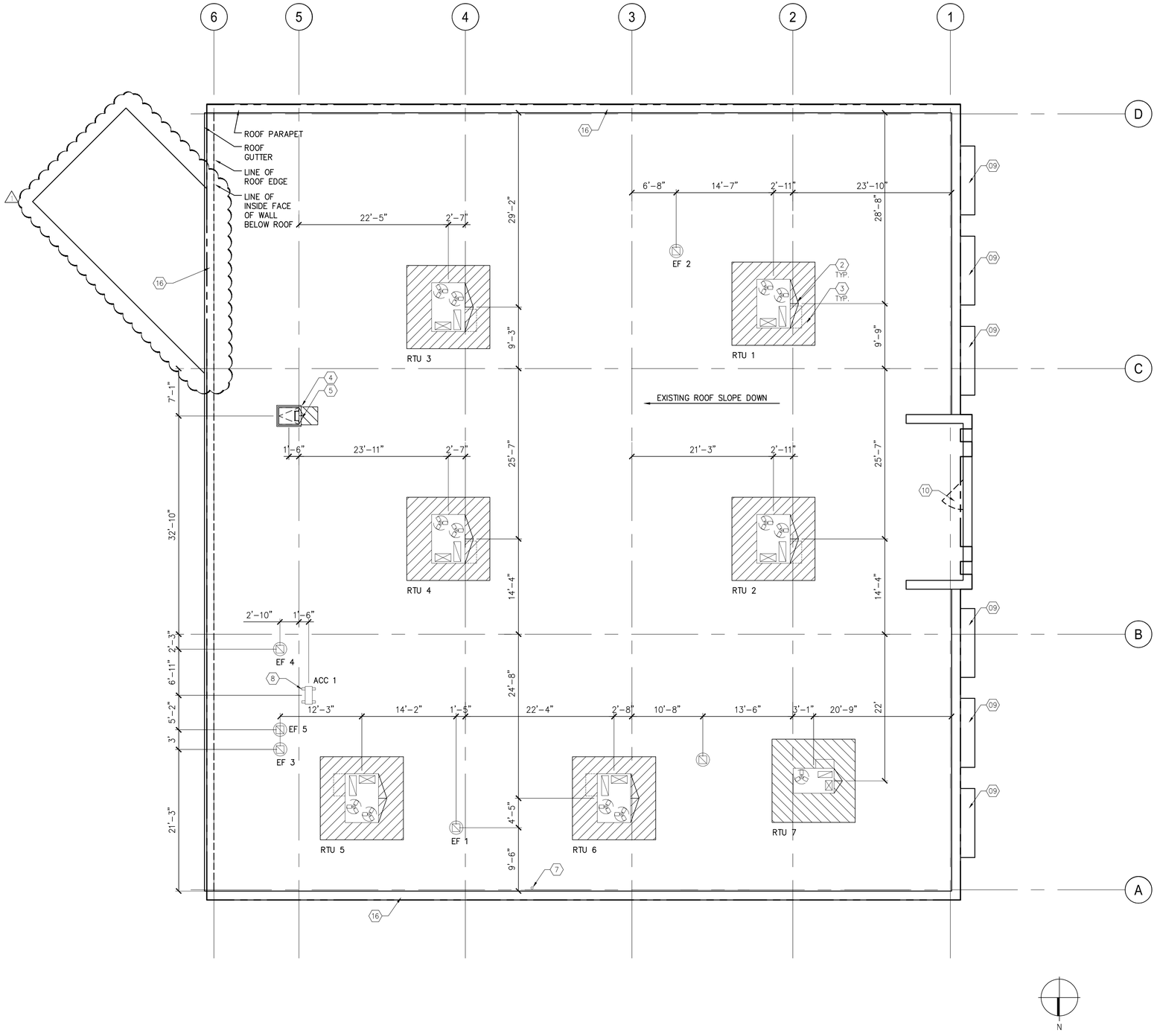

KEY NOTES (NOT ALL MAY BE APPLICABLE) (##):

1. RTU ROOF SCREEN IF REQ'D BY AHJ, TYP. ALL ROOF — N/A
2. CRICKET AT HIGH SIDE OF RTU ROOF CURB, TYP.
3. ROOF WALKWAY PADS (07720) TYP.
4. ROOF HATCH SAFETY RAILING SYSTEM (07720) WITH ROOF CRICKET
5. ROOF HATCH (07720)/ REF. DET. 07/A8.3, ANY REQUIRED ADJUSTMENTS TO LOCATION SHOWN SHALL REQUIRE COORDINATION WITH TENANT CONSTRUCTION MANAGER
6. ROOF HATCH & MECH. EQUIPMENT LOCATION IS WITHIN 10'-0" OF A PARAPET LOWER THAN 42" HGT — N/A
7. DRYER VENT, SEE MECH. DWGS.
8. SPLIT SYSTEM HVAC CONDENSING UNIT ON PREFAB ROOF CURB
9. FABRIC AWNINGS
10. SIGN ACCESS PANEL AT BACK SIDE OF PARAPET (PART OF SHELL CONSTRUCTION)
11. [illegible] (10530) N.I.C., UNDER SEPARATE PERMIT FOR EXTERIOR ALTERATIONS — N/A
12. CANOPY DRAINAGE (10530) N.I.C., UNDER SEPARATE PERMIT FOR EXTERIOR ALTERATIONS — N/A
13. ROOF HYDRANT, SEE P2.1 FOR LOCATION, CONTRACTOR SHALL INSTALL LOCKING HARDWARE (08710) — N/A
14. EXTERIOR SENSOR DEVICE FOR EMS, SEE E2.5 — N/A
15. EXISTING ROOF HATCH — N/A
16. EXISTING PARAPET WALLS, 42" MIN. ABOVE ROOF WALKING SURFACE, V.I.F., NO ALTERATIONS
17. EXISTING CANOPY — N/A
18. EXISTING SIGN ACCESS PANEL AT BACK SIDE OF PARAPET — N/A

GENERAL NOTES:

A. VERIFY MEASUREMENTS WITH CORRESPONDING CONSTRUCTED OR EXISTING CONDITIONS PRIOR TO PROCEEDING WITH THE WORK, AND NOTIFY THE ARCHITECT IMMEDIATELY OF SIGNIFICANT DISCREPANCIES USING THE "CONTRACTOR REQUEST FOR INFORMATION" FORM AND SUPPLEMENTARY CONTRACTOR DETAILS AS REQUIRED

B. PROVIDE PIPE FLASHINGS, CONDUIT FLASHINGS, AND MANUFACTURED GAS PIPING SUPPORTS (07720) AS REQD. FOR ALL NEW WORK

C. PROVIDE ROOF OPENING STRUCTURAL FRAMES, / REF. DET. 2/A6.1

D. PAINT ROOFTOP LOCATED FERROUS METAL ITEMS AND EXPOSED PIPING

E. PAINT EXPOSED GAS PIPING COLOR PT-07HG "SAFETY YELLOW" (09900) OR AS REQUIRED BY THE LOCAL AHJ

F. CONTRACTOR SHALL KEEP ROOF CLEAN OF ALL DEBRIS DURING ALL CONSTRUCTION WORK

G. REFER TO SHEET A0.3, A0.4 AND PROJECT MANUAL SECTION 10300 FOR DESCRIPTION OF THE DIVISION OF RESPONSIBILITIES BETWEEN PETCO VENDORS AND CONTRACTOR(S)

H. CONTRACTOR SHALL PROVIDE SAFE ACCESS FOR SIGN SUBCONTRACTOR TO INSTALL BUILDING SIGNS INCLUDING BUT NOT LIMITED TO STRUCTURALLY SOUND SCAFFOLDING AND/OR LIFTS AND ACCESS TO PARAPET AND PARAPET CAVITY FOR ALL ELECTRICAL CONNECTIONS

I. REFER TO PLUMBING DRAWINGS, MECHANICAL AND ELECTRICAL DRAWINGS FOR ADDITIONAL ROOF PENETRATIONS REQUIRING ROOF FLASHING WORK. ALL ROOF PENETRATIONS FOR MINOR ROOF VENTS AND SIMILAR ITEMS MAY NOT BE INDICATED ON THIS ROOF PLAN: HOWEVER, ALL ROOF FLASHING WORK SHALL BE PROVIDED BY THE APPROVED ROOFING SUBCONTRACTOR SO AS TO OBTAIN OR MAINTAIN NEW (OR EXISTING) ROOFING WARRANTIES

J. ALL ROOF RELATED WORK SHALL SHALL BE PROVIDED BY THE LANDLORD'S ROOFING SUBCONTRACTOR SO AS TO OBTAIN OR MAINTAIN NEW OR EXISTING ROOFING WARRANTIES

01 ROOF PLAN

SCALE: 1/8" = 1'-0" REF.:

SBLM

Owner
Petco Animal Supplies Stores, Inc.
654 Richland Hills Drive
San Antonio, Texas 78245
T: 760.644.5866
Contact: Sharon Siekierski, Construction Manager
sharon.siekierski@petco.com

petco

Architect
SBLM
11430 North Kendall Drive, Suite 310
Miami, FL 33176
T: 305.412.9187 F: 305.412.6731
Contact: Stephen Hartley, Project Manager
shartley@sblm.com

MEP Engineer
Acertus Consulting Group, LLC
14817 West 95th Street
Lenexa, KS 66215
T: 913.322.5150 F: 913.322.5155

Structural Engineer
BSE Structural Engineers, LLC
11320 West 79th Street
Lenexa, KS 66214
T: 913.492.7400
Contact: Kevin S. Boehringer, P.E., S.E.
kboehringer@bsestructural.com

Distribution:	*Date:*
EXISTING CONDITIONS PLAN	09-16-21
FIRST REVIEW CD SET	11-16-21
A&E INTERNAL COORDINATION CD SET	11-30-21
COMPREHENSIVE REVIEW CD SET	12-08-21
FINAL REVIEW CD SET	12-22-21
BID SET	01-07-22
PERMIT FILING SET	02-07-22
ADDENDUM 01	02-17-22

Seal & Signature

Project
Columbia, MO
400 N Stadium Blvd.
Columbia, MO 65203

Petco Store Heloc. No. 0855 9891-R2140 — *Project No. 021156 / 21Q4.00*
Drawn By: HM/DR — *Checked By: JI*

ARCHITECTURAL ROOF PLAN

A2.6

CONTRACTOR(S) SHALL VERIFY EXISTING CONDITIONS AND CORRELATE DIMENSIONS PRIOR TO PROCEEDING WITH WORK. DO NOT SCALE THESE DRAWINGS. ANY DISCREPANCIES, COPYRIGHT ARCHITECT OF ANY DISCREPANCIES. COPYRIGHT SBLM PC. UNAUTHORIZED REPRODUCTION OR OTHER USE OF THIS DRAWING IS PROHIBITED.

THE FOLLOWING APPLIES TO ALL ARCHITECTURAL SHEETS:
This computer-aided drawing (CAD) data, provided at the request of, and for the convenience of the recipient (the User) only. The CAD data was prepared as a SBLM internal working document. As such, it may be incomplete, contain unintentional inaccuracies, or be partially incomplete. SBLM makes no warranties, either expressed or implied, of the accuracy of these drawings. The user is warned that while all the digital CAD data appears to be extremely accurate, this apparent accuracy is an artifact of the technique used to generate it, and is in no way to imply actual accuracy. The user of this data takes full responsibility for the accuracy and correctness of all measurements, areas, inventories, etc. extracted from this data either manually or with the use of a computer. The user of this data agrees to indemnify and hold SBLM harmless from any damage, liability or cost, including but not limited to reasonable attorney's fees and cost of defense, arising from such use, or from any changes made by these files by anyone other than SBLM, or from any reuse from the files and data without the prior written consent of SBLM. User confirms acceptance of the above conditions, and agrees, to the fullest extent of the law, to indemnify and hold SBLM harmless from any damage, liability or cost, including but not limited to reasonable attorney's fees and cost of defense, arising from any reuse of the data without the prior written consent of SBLM.

FILENAME:Y:\Projects\2021\021156\Drawings\Current Set\11_021156_A2.6.dwg | PLOTTED BY:Mon, Harold | DATE: February 23, 2022

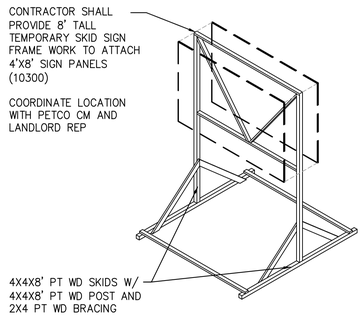

20 SKID SIGN DETAIL

SCALE: N.T.S. REF.:

GENERAL NOTES:

A. BANNER ANCHORS TO BE PROVIDED AT ALL BUILDING ELEVATIONS WHERE APPROVED SIGNAGE IS LOCATED. BANNER ANCHORS SHALL MEET PETCO PROTOTYPE DESIGN STANDARDS.
B. SURFACE MOUNTED ELECTRICAL CONDUITS, PIPES, UTILITIES, ETC. SHALL NOT BE PERMITTED ON ANY EXTERIOR WALLS OF PETCO TENANT SPACE EXCEPT FOR RAINWATER CONDUCTORS AT REAR ELEVATION.
C. PETCO REQUIRES 8 WEEKS FOR DESIGN AND PRODUCTION OF WINDOW GRAPHICS, FROM DATE THEY RECEIVE FIELD DIMENSIONS FROM CONTRACTOR FOR EACH VISUAL OPENING WITHIN THE EFFECTED WINDOW(S).
D. WHERE SPANDREL GLASS IS CALLED FOR, REFER TO 08800.
E. ALL NON-PROTO EXTERIOR ELEMENTS (E.G. FABRIC CANOPIES) MUST BE APPROVED IN WRITING BY PETCO'S DIRECTOR OF ARCHITECTURAL SERVICES.
F. ~~STRUCTURAL MODIFICATIONS INCLUDING BUT NOT LIMITED TO FACADE ALTERATIONS, DOOR AND WINDOW OPENINGS, ROOF OPENINGS AND THEIR RESPECTIVE STRUCTURAL REINFORCING AND DETAILS ARE BY OTHERS UNDER SEPARATE CONTRACT/PERMIT AND ARE NOT INCLUDED IN THESE~~ N/A
G. PATCH AND REPAIR EXTERIOR WALLS AND FINISHES AS REQUIRED TO PROVIDE UNIFORM FINISH.

EXTERIOR FINISH LEGEND: (N.I.C., UNDER SEPARATE PERMIT FOR EXTERIOR ALTERATIONS)

REFER TO SECTION 09900 FOR PAINT TYPE AND FINISH

CMU-GR-01	4X16 GROUND FACE CMU, FIELD (04220)
CMU-GR-02	4X16 GROUND FACE CMU, ACCENT (04220)
CMU-SM	8" SMOOTH FACE CMU, PAINT TO MATCH EIFS (04220)
EIFS-01	E.I.F.S., BY DRYVIT SYSTEMS, "PETC011030" (07240)
EIFS-02	E.I.F.S., BY DRYVIT SYSTEMS, "PETC021030" (07240)
AL-CO	ALUMINUM COPING, PPG DURANAR UC70149F "DARK BRONZE" (07600)
AL-GU	ALUMINUM GUTTER, PPG DURANAR UC70149F "DARK BRONZE" (07600)
AL-RW	ALUMINUM RAINWATER CONDUCTOR, PPG DURANAR UC70149F "DARK BRONZE" (07600)
AL-CA1	ALUMINUM CANOPY, SW 9176 "DRESS BLUES" (10530)
AL-CL	ALUMINUM BREAK METAL TRIM ENCLOSURE, PPG DURANAR UC70149F DARK BRONZE (07600)
~~WC-01~~	~~DECORATIVE VENEER WOOD COMPOSITE, CALI BAMBOO INFINITY COMPOSITE PLANKING, BRONZE (06600), 1/4" VERTICAL JOINTS AS SHOWN, EQUALLY SPACED, 1/4" HORIZONTAL JOINTS~~ N/A
WC-02	DECORATIVE VENEER WOOD COMPOSITE, CALI BAMBOO TRU-ORGANICS COMPOSITE PLANKING, SEDONA FINISH SOLID PLANK (06600), SEE DETAIL 15/A6.1
PT-40	SW "FRESCO CREAM" #7719, MATTE/FLAT FINISH
PT-41	SW "CANOE" #7724, MATTE/FLAT FINISH

KEY NOTES (NOT ALL MAY BE APPLICABLE) (#):

1. ~~WALL MOUNTED GOOSE LAMP LIGHT FIXTURE OVER SERVICES SIGN, N.I.C., UNDER SEPARATE PERMIT FOR EXT. ALTERATIONS, SHOWN FOR REFERENCE ONLY, BY BASELITE CORP, 877-999-1990, CAT#A810/61/E6/61/LWTM-10W-3500K-120VOLT~~ N/A
2. ~~RECESSED CANOPY CEILING LIGHT FIXTURE PROVIDED AND INSTALLED BY OTHERS, N.I.C., UNDER SEPARATE PERMIT FOR EXT. ALTERATIONS, SHOWN FOR REFERENCE ONLY (SEE A2.4), BY COOPER LIGHTING, 770-486-4500 CAT#LRC-B416-1-LED-E1-WST~~ N/A
3. PRIVACY GRAPHICS, PROVIDED AND INSTALLED BY PETCO VENDOR
4. ~~EXTERIOR LIGHTING, PROVIDED AND INSTALLED BY OTHERS, SEE ELECTRICAL DRAWINGS~~ N/A
5. ~~BUILDING ADDRESS NUMBER GRAPHICS IF REQ'D BY JURISDICTION~~ N/A
6. ~~PROVIDE SUN CONTROL WINDOW FILM ON ALL WINDOW AND DOOR GLAZING (08800)~~ N/A
7. ~~PETCO SERVICES SIGNS UNDER SEPARATE PERMIT~~ N/A
8. TENANT BUILDING SIGN UNDER SEPARATE PERMIT
9. TEMPORARY CONSTRUCTION BANNER SIGN, PROVIDED AND INSTALLED BY GC (10300)
10. EXISTING CONCEALED PLYWD. SHEATHING OR OTHER SOLID SUBSTRATE BEHIND BUILDING SIGN WHERE REQUIRED, V.I.F.
11. ~~NEW STEEL COLUMN, SEE STRUCTURAL W/ ALUM. BREAK METAL FABRICATED MASONRY STOREFRONT SYSTEM~~ N/A
12. EXISTING SHELL BUILDING CONSTRUCTION, V.I.F.
13. ~~NEW STUCCO FINISH TO MATCH EXISTING, PATCH AND REPAIR WALL, PAINT COLOR AND SHEEN SHALL MATCH THE EXISTING~~ N/A
14. EXISTING WALL MOUNTED LIGHTS
15. ~~NEW STOREFRONT DOOR, SIDELIGHT AND TRANSOM, SEE FLOOR PLAN AND STRUCTURAL DRAWINGS~~ N/A
16. WALL MOUNTED SIGN REQUIRES SOLID SUBSTRATE FOR ADEQUATE ATTACHMENT. CONTRACTOR SHALL VERIFY CONDITIONS IN FIELD
17. CANOPY OVER SPEED LIFT
18. SPEED LIFT
19. EXIST BOLLARDS AND CONCRETE SLAB ON GRADE
20. PROVIDE 30" HIGH FRAME AND AWNINGS. B.O. OF AWNING 8'-2" A.F.F.

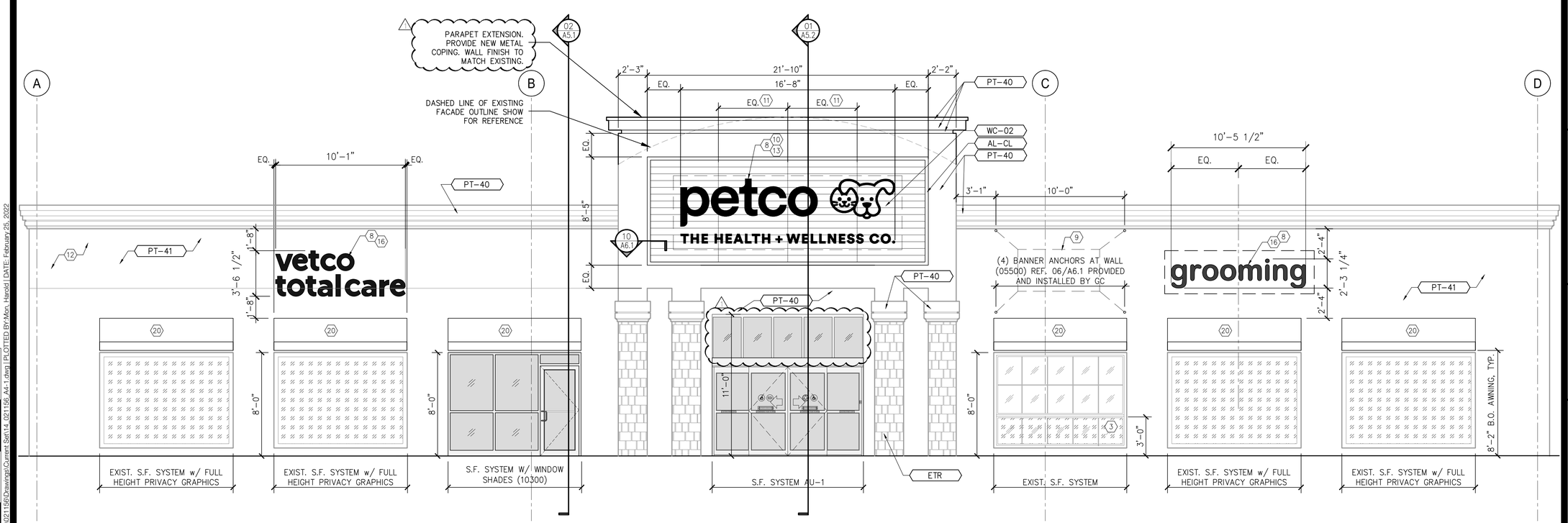

01 FRONT ELEVATION

SCALE: 1/4" = 1'-0" REF.: A2.1

CONTRACTOR(S) SHALL VERIFY EXISTING CONDITIONS AND CORRELATE DIMENSIONS PRIOR TO BEGINNING WORK. DO NOT SCALE DRAWINGS. THESE DRAWINGS SHALL REMAIN THE PROPERTY OF THE ARCHITECT OF ANY DISCREPANCIES. COPYRIGHT SBLM PC. UNAUTHORIZED REPRODUCTION OR OTHER USE OF THIS DRAWING IS PROHIBITED.

THE FOLLOWING APPLIES TO ALL ARCHITECTURAL SHEETS:
This CAD data was prepared at request of, and for the convenience of the recipient (the User) only. The CAD data was prepared as a SBLM internal working document. As such, it may be incomplete, contain unintentional inaccuracies, or be partially incomplete. SBLM makes no warranties, either expressed or implied, of the accuracy of these drawings. The user is warned that while all the digital CAD data appears to be extremely accurate, this apparent accuracy is an artifact of the technique used to generate it and is in no way to imply actual accuracy. The user of this data takes full responsibility for the accuracy and correctness of all measurements, areas, inventories, etc. extracted from this data either manually or with the use of a computer. The user of this data takes full responsibility for the accuracy and correctness of all calculations, designs, specifications, or other documents or products which are based in whole or in part on information obtained from the data. The User agrees that SBLM is not liable for any damages, liability or cost, including but not limited to reasonable attorney's fees and cost of defense, arising from such use, or from any changes made by these files by anyone other than SBLM, or from any reuse from the files and data without the prior written consent of SBLM. User confirms acceptance of the above conditions, and agrees, to the fullest extent of the law, to indemnify and hold SBLM harmless from any damage, liability or cost, including but not limited to reasonable attorney's fees and cost of defense, arising from such use, or from any changes made by these files by anyone other than SBLM, or from any reuse from the files and data without the prior written consent of SBLM.

FILENAME:V:\Projects\2021\021156\Drawings\Current Set\A4.1.dwg | PLOTTED BY:Mon, Harold | DATE: February 25, 2022

SBLM

Owner
Petco Animal Supplies Stores, Inc.
654 Richland Hills Drive
San Antonio, Texas 78245
T: 760.644.5866
Contact: Sharon Siekierski, Construction Manager
sharon.siekierski@petco.com

petco

Architect
SBLM
11430 North Kendall Drive, Suite 310
Miami, FL 33176
T: 305.412.9187 F: 305.412.6731
Contact: Stephen Hartley, Project Manager
shartley@sblm.com

MEP Engineer
Acertus Consulting Group, LLC
14817 West 95th Street
Lenexa, KS 66215
T: 913.322.5150 F: 913.322.5155

Structural Engineer
BSE Structural Engineers, LLC
11320 West 79th Street
Lenexa, KS 66214
T: 913.492.7400
Contact: Kevin S. Boehringer, P.E., S.E.
kboehringer@bsestructural.com

Distribution:	Date:
EXISTING CONDITIONS PLAN	09-16-21
FIRST REVIEW CD SET	11-16-21
A&E INTERNAL COORDINATION CD SET	11-30-21
COMPREHENSIVE REVIEW CD SET	12-08-21
FINAL REVIEW CD SET	12-22-21
BID SET	01-07-22
PERMIT FILING SET	02-07-22
1 ADDENDUM 01	02-17-22

Seal & Signature

Project
Columbia, MO
400 N Stadium Blvd.
Columbia, MO 65203

Petco Store Heloc. No. 0855 9891-R2140 | Project No. 021156 / 21Q4.00
Drawn By: HM/DR | Checked By: JI

EXTERIOR FACADE ELEVATIONS

A4.1A

CONTRACTOR(S) SHALL VERIFY EXISTING CONDITIONS AND CORRELATE DIMENSIONS PRIOR TO BEGINNING WORK. DETAILED DRAWINGS TAKE PRECEDENCE OVER SCALED DRAWINGS. DO NOT SCALE DRAWINGS. NOTIFY THE ARCHITECT OF ANY DISCREPANCIES. COPYRIGHT SBLM PC. UNAUTHORIZED REPRODUCTION OR OTHER USE OF THIS DRAWING IS PROHIBITED.

THE FOLLOWING APPLIES TO ALL ARCHITECTURAL SHEETS:
This computer aided design (CAD) plot is furnished as a courtesy at cost and for the convenience of the recipient (the "User") only. The CAD data was prepared as a SBLM internal working document. As such, it may be incomplete, contain unintentional inaccuracies, or be partially incorrect or outdated. SBLM makes no warranties, either expressed or implied, of the accuracy of these drawings. The user is warned that while all the digital CAD data appears to be extremely accurate, this apparent accuracy is an artifact of the techniques used to generate it, and is no way to imply actual accuracy. The user of this data bears full responsibility for the accuracy and correctness of all measurements, areas, inventories, etc. extracted from this data either manually or with the use of a computer. The user of this data bears full responsibility for the accuracy and correctness of any data which is derived or generated from this data by other parties. The User agrees that SBLM has no liability for any damages resulting from the User's use of the data provided by SBLM, including but not limited to consequential damages, and the User confirms acceptance of the above conditions, and agrees, to the fullest extent of the law, to indemnify and hold SBLM harmless from any damage, liability or cost, including but not limited to reasonable attorney's fees and cost of defense, arising from such use, or from any changes made by these files by anyone other than SBLM, or from any reuse from the files and data without the prior written consent of SBLM.

FILENAME:X:\Projects\2021\021156\Drawings\Current Set\14. 021156 A4.1.dwg | PLOTTED BY:Mon, Harold | DATE: February 26, 2022

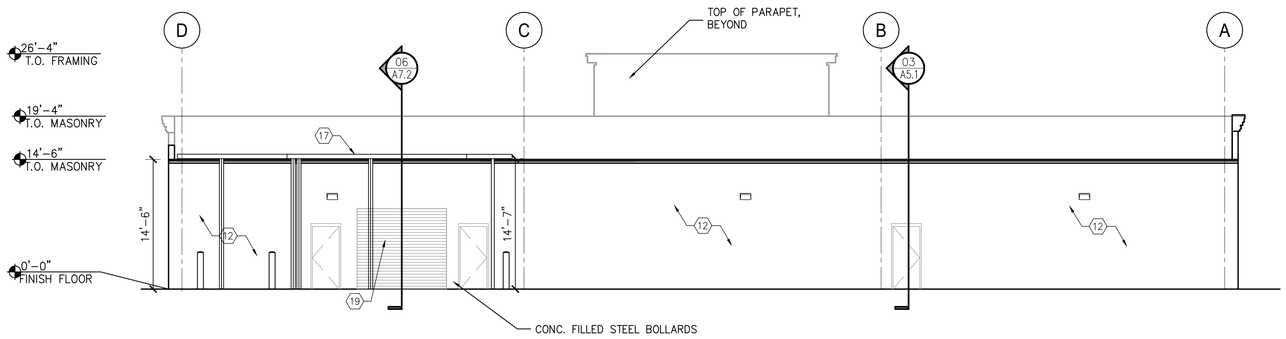

ELEVATION 2

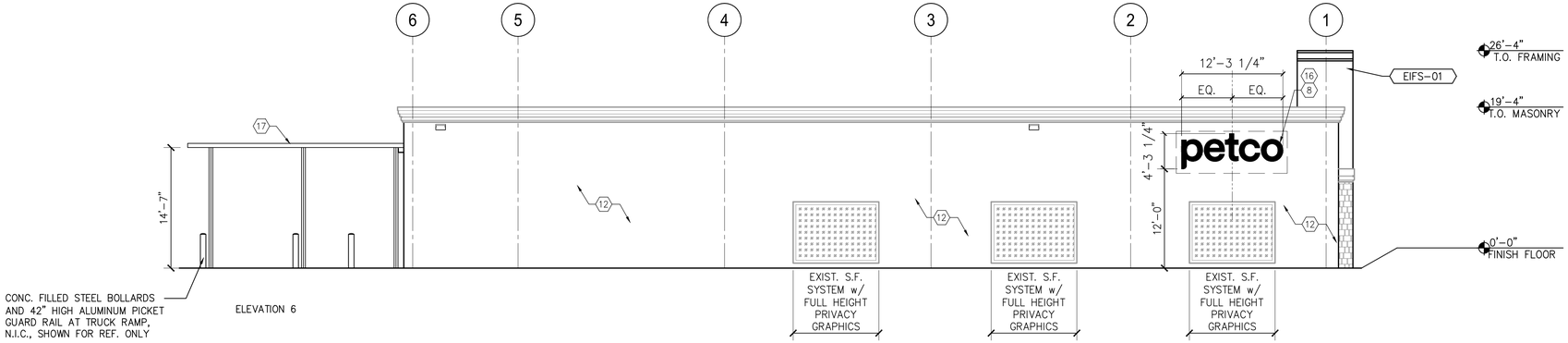

ELEVATION 6

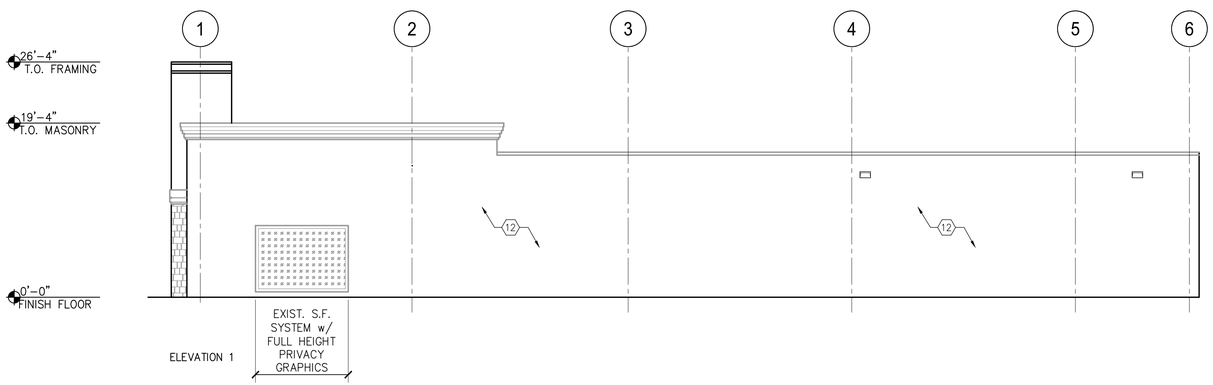

ELEVATION 1

KEY NOTES (NOT ALL MAY BE APPLICABLE) (#):

1. WALL MOUNTED GOOSE LAMP LIGHT FIXTURE OVER SERVICES SIGN, N.I.C., UNDER SEPARATE PERMIT FOR EXT. ALTERATIONS, SHOWN FOR REFERENCE ONLY, BY BASELITE CORP, 877-999-1990, CAT#A810/61/E6/61/LWTM-10W-3500K-120VOLT — N/A
2. RECESSED CANOPY CEILING LIGHT FIXTURE PROVIDED AND INSTALLED BY OTHERS, N.I.C., UNDER SEPARATE PERMIT FOR EXT. ALTERATIONS, SHOWN FOR REFERENCE ONLY (SEE A2.4), BY COOPER LIGHTING, 770-486-4500 CAT#LRC-RL16-L-LED-E1-WST — N/A
3. PRIVACY GRAPHICS, PROVIDED AND INSTALLED BY PETCO VENDOR
4. EXTERIOR LIGHTING, PROVIDED AND INSTALLED BY PETCO VENDOR, SEE ELECTRICAL DRAWINGS — N/A
5. BUILDING ADDRESS NUMBER GRAPHICS IF REQ'D BY JURISDICTION — N/A
6. PROVIDE SUN CONTROL WINDOW FILM ON ALL WINDOW AND DOOR GLAZING (08800) — N/A
7. PETCO SERVICES SIGNS UNDER SEPARATE PERMIT — N/A
8. TENANT BUILDING SIGN UNDER SEPARATE PERMIT
9. TEMPORARY CONSTRUCTION BANNER SIGN, PROVIDED AND INSTALLED BY GC (10300)
10. EXISTING CONCEALED PLYWD. SHEATHING OR OTHER SOLID SUBSTRATE BEHIND BUILDING SIGN WHERE REQUIRED, V.I.F.
11. NEW STEEL COLUMN, SEE STRUCTURAL W/ ALUM. BREAK METAL COVERS. MATCHING STOREFRONT SYSTEM — N/A
12. EXISTING SHELL BUILDING CONSTRUCTION, V.I.F.
13. NEW CONCRETE PATCH, SANDBLAST, AND REPAIR WALL, PAINT COLOR AND SHEEN SHALL MATCH THE EXISTING — N/A
14. EXISTING WALL MOUNTED LIGHTS
15. NEW STOREFRONT DOOR, SIDELIGHT AND TRANSOM, SEE FLOOR PLAN AND STRUCTURAL DRAWINGS — N/A
16. WALL MOUNTED SIGN REQUIRES SOLID SUBSTRATE FOR ADEQUATE ATTACHMENT. CONTRACTOR SHALL VERIFY CONDITIONS IN FIELD
17. CANOPY OVER SPEED LIFT
18. SPEED LIFT
19. EXIST BOLLARDS AND CONCRETE SLAB ON GRADE
20. PROVIDE 30" HIGH FRAME AND AWNINGS. B.O. OF AWNING 8'-2" A.F.F.

01 FRONT ELEVATION

SCALE: 1/8" = 1'-0" REF.: A2.1

SBLM

Owner
Petco Animal Supplies Stores, Inc.
654 Richland Hills Drive
San Antonio, Texas 78245
T: 760.644.5866
Contact: Sharon Siekierski, Construction Manager
sharon.siekierski@petco.com

petco

Architect
SBLM
11430 North Kendall Drive, Suite 310
Miami, FL 33176
T: 305.412.9187 F: 305.412.6731
Contact: Stephen Hartley, Project Manager
shartley@sblm.com

MEP Engineer
Acertus Consulting Group, LLC
14817 West 95th Street
Lenexa, KS 66215
T: 913.322.5150 F: 913.322.5155

Structural Engineer
BSE Structural Engineers, LLC
11320 West 79th Street
Lenexa, KS 66214
T: 913.492.7400
Contact: Kevin S. Boehringer, P.E., S.E.
kboehringer@bsestructural.com

Distribution:	*Date:*
EXISTING CONDITIONS PLAN	09-16-21
FIRST REVIEW CD SET	11-16-21
A&E INTERNAL COORDINATION CD SET	11-30-21
COMPREHENSIVE REVIEW CD SET	12-08-21
FINAL REVIEW CD SET	12-22-21
BID SET	01-07-22
PERMIT FILING SET	02-07-22
1 ADDENDUM 01	02-17-22

Seal & Signature

Project
Columbia, MO
400 N Stadium Blvd.
Columbia, MO 65203

Petco Store Reloc. No. 0855 9891-R2140 — *Project No. 021156 / 21Q4.00*
Drawn By: HM/DR — *Checked By: JI*

EXTERIOR FACADE ELEVATIONS

A4.1B