RIDGEMONT DR. BRIDGE OVER COUNTY HOUSE BRANCH

FOR

CITY OF COLUMBIA, MISSOURI

BRIDGE NO. 930011

50' BRIDGE & ASPHALT SURFACE

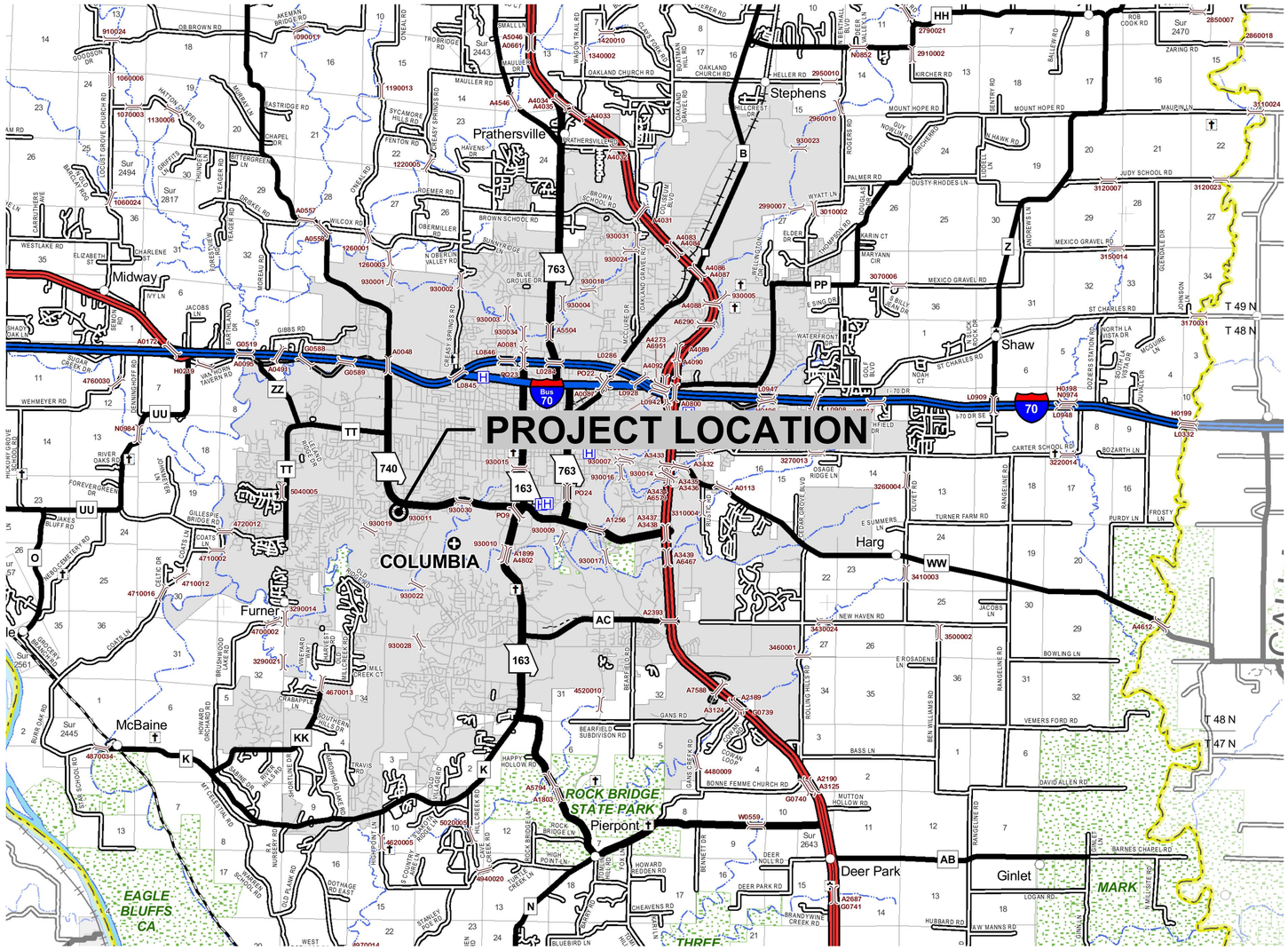

SECTION 22, T48N, R13W

SCALE (MILES)

0 1 2

COUNTY	BOONE
ROUTE	RIDGEMONT DR.
PROJECT	
JOB NO.	20KC40008

DESIGN DESIGNATION

ADT (2020)	1000
DESIGN ADT. (2040)	1500
AADT TRUCK	3%
DESIGN SPEED	25 MPH
D (DIRECTION)	50%

FUNCTIONAL CLASSIFICATION

LOCAL

LENGTH OF PROJECT

BEGINNING OF PROJECT	8+99.92
END OF PROJECT	11+05.05
APPARENT LENGTH	205.13 FEET
EQUATIONS & EXCEPTIONS	-
	-
TOTAL CORRECTIONS	-
NET LENGTH OF PROJECT	0.04 MILES
STATE LENGTH	-
FEDERAL LENGTH	0.1 MILES

INDEX OF SHEETS

DESCRIPTION	SHEET NO.
COVER SHEET	1
TYPICAL SECTIONS	2
PLAN & PROFILE	3
GRADING & EROSION CONTROL PLAN	4
TRAFFIC CONTROL PLAN	5
STORM PLAN & PROFILES	6-7
SANITARY PLAN & PROFILES	8
GENERAL NOTES & QUANTITIES	9
BRIDGE PLAN & PROFILE	10
END BENT 1	11-13
END BENT 2	14-16
BEARING PAD ASSEMBLY	17
FRAMING PLAN	18
DETAILS OF PRESTRESSED PANELS	19
SLAB - PLAN & DETAILS	20
TYPE D BARRIER	21
TYPE D BARRIER AT END BENTS	22
BILL OF REINFORCING STEEL	23
RIGHT-OF-WAY PLAN	24
CROSS SECTIONS	25
DETAILS	26-28

CALL OR CLICK 3 DAYS BEFORE YOU DIG!

MISSOURI ONE CALL SYSTEM 1-800-DIG-RITE OR 811

www.mo1call.com

CAUTION:
INFORMATION ON THIS DRAWING CONCERNING TYPE & LOCATION OF UNDERGROUND & OTHER UTILITIES IS NOT GUARANTEED TO BE ACCURATE OR ALL INCLUSIVE. THE CONTRACTOR IS RESPONSIBLE FOR MAKING HIS OWN DETERMINATION AS TO THE TYPE & LOCATION OF UNDERGROUND & OTHER UTILITIES AS MAY BE NECESSARY TO AVOID DAMAGE THERETO.

CONSULTANT

PROJECT ENGINEER — DATE 4-4-2022

CITY

DATE

ANDERSON ENGINEERING
EMPLOYEE OWNED
ENGINEERS · SURVEYORS · LABORATORIES · DRILLING

STATE OF MISSOURI — GARY D. STRACK — NUMBER E-29975 — 04/04/2022 — PROFESSIONAL ENGINEER

DRAWING INFO.	
FIELD BY:	NDO/CAW
DRAWN BY:	GDS
CHECK BY:	
DATE:	10/21/2021
FIELD BOOK:	
JOB NUMBER:	20KC40008

REVISIONS		
NO.	DESCRIPTION	BY	DATE

©COPYRIGHT ANDERSON ENGINEERING, INC. 2012

COVER SHEET

RIDGEMONT DR. BRIDGE OVER COUTNY HOUSE BRANCH

SEC. 22 T48N, R13W

CITY OF COLUMBIA, MISSOURI

G:\Shared drives\MO\Columbia\20KC40008 Ridgemont Bridge\CADD\Plans\R_Cover Sheet

SHEET NUMBER 1 OF 28

NOTE:

EDGE OF TRAVELED WAY AND SHOULDERS TO TRANSITION TO MATCH EXISTING AT ENDS OF PROJECT.

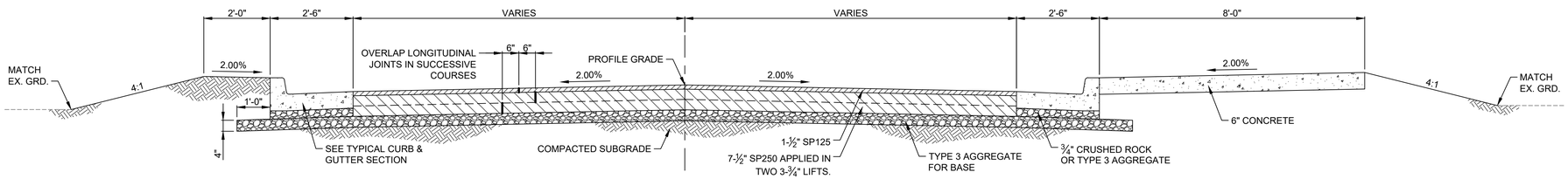

TYPICAL SECTION

RIDGEMONT RD., STA: 8+99.92 TO 9+73.00

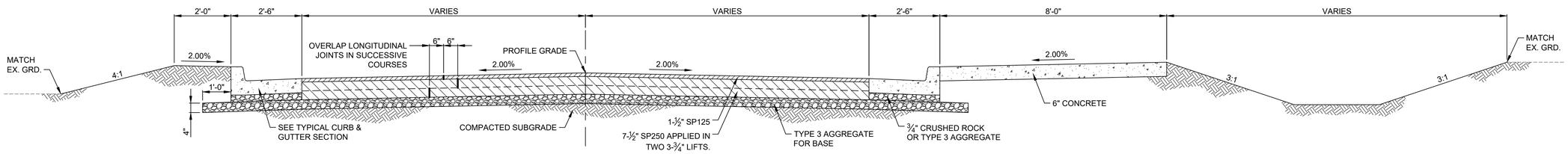

TYPICAL SECTION

RIDGEMONT RD., STA: 10+23.00 TO 11+05.05

LEGEND

(USED IN PLANS)

- EXISTING CONTOUR (MAJOR)
- EXISTING CONTOUR (MINOR)
- EXISTING FEATURE
- EXISTING FENCE
- EXISTING GUARDRAIL
- SECTION LINE
- EXISTING PROPERTY LINE
- EXISTING EASEMENT
- EXISTING STORM WATER
- EXISTING GAS LINE
- EXISTING WATER LINE
- EXISTING SANITARY SEWER
- EXISTING UNDERGROUND ELECTRIC
- EXISTING OVERHEAD ELECTRIC
- EXISTING UNDERGROUND TELEPHONE
- EXISTING OVERHEAD TELEPHONE
- EXISTING FIBER OPTIC
- EXISTING UNDERGROUND CABLE TV
- EXISTING OVERHEAD CABLE TV
- EXISTING MAILBOX
- EXISTING STORM INLET
- EXISTING GAS METER
- EXISTING GAS VALVE
- EXISTING WATER METER
- EXISTING WATER VALVE
- EXISTING FIRE HYDRANT
- EXISTING WATER WELL
- EXISTING SANITARY MANHOLE
- EXISTING POWER POLE
- EXISTING LIGHT POLE
- EXISTING GUY WIRE ANCHOR
- EXISTING TELEPHONE PEDESTAL
- EXISTING SIGN
- EXISTING TREE
- CONTROL POINT
- FOUND IRON BAR
- EXISTING BENCHMARK

NOTE:

DASHED OR SCREENED SYMBOL INDICATES EXISTING FEATURE.

ABBREVIATION TABLE

BC:	BACK OF CURB
℄	CENTERLINE
CONT.	CONTINUOUS
C.P.	CONTROL POINT
EG:	EXISTING GRADE
EX.	EXISTING
FG:	FINISH GRADE
FL:	FLOW LINE
GL:	GUTTER LINE
MAX.	MAXIMUM
MIN.	MINIMUM
OFF:	OFFSET
PL	PROPERTY LINE
PR.	PROPOSED
R/W	RIGHT-OF-WAY
STA:	STATION
TBM	TEMPORARY BENCHMARK
T.C.E.	TEMPORARY CONSTRUCTION EASEMENT
TEMP.	TEMPORARY
TYP.	TYPICAL

UTILITIES INFORMATION

ELECTRIC
SHAWN CARRICO
PUBLIC WORKS - ELECTRIC DEPARTMENT
CITY OF COLUMBIA
701 E BROADWAY, COLUMBIA, MO 65205
(573) 823-9124
SHAWN.CARRICO@COMO.GOV

GAS
AMEREN
TRENTON SNODGRASS
2001 MAGUIRE BLVD,
COLUMBIA, MO 65201
(573) 876-3063

CABLE TELEVISION
CHARTER COMMUNICATIONS
TRAVIS RECTOR
904 RAIN FOREST PARKWAY,
COLUMBIA, MO 65202
(636) 667-6132

CABLE TELEVISION
MEDIACOM
BOB BONER
1211 WILKES BOULEVARD,
COLUMBIA, MO 65201
(573) 489-1937

WATER
DAN CLARK
PUBLIC WORKS - WATER DEPARTMENT
CITY OF COLUMBIA
701 E BROADWAY, COLUMBIA, MO 65205
(573) 874-7738
DAN.CLARK@COMO.GOV

CABLE TELEVISION
CENTURY LINK
DAVID ROBERTS
119 N 9TH STREET,
COLUMBIA, MO 65201
(573) 876-3503

CABLE TELEVISION
SOCKET TELECOM
TODD PULIS
2703 CLARK LANE,
COLUMBIA, MO 65202
(573) 818-4778

ANDERSON ENGINEERING
EMPLOYEE OWNED
ENGINEERS · SURVEYORS · LABORATORIES · DRILLING

STATE OF MISSOURI
GARY D. STRACK
NUMBER E-29972
PROFESSIONAL ENGINEER
04/04/2022

DRAWING INFO.

FIELD BY:	
DRAWN BY:	NDO/CAW
CHECK BY:	GDS
DATE:	10/21/2021
FIELD BOOK:	
JOB NUMBER:	20KC40008

REVISIONS

NO.	DESCRIPTION	BY	DATE

©COPYRIGHT ANDERSON ENGINEERING, INC. 2012

TYPICAL SECTIONS
RIDGEMONT DR. BRIDGE OVER COUTNY HOUSE BRANCH
SEC. 22 T48N, R13W
CITY OF COLUMBIA, MISSOURI

SHEET NUMBER 2 OF 28

G:\Shared drives\KC\Columbia\20KC40008 Ridgemont Bridge\CADD\Final\B_Typical Sections

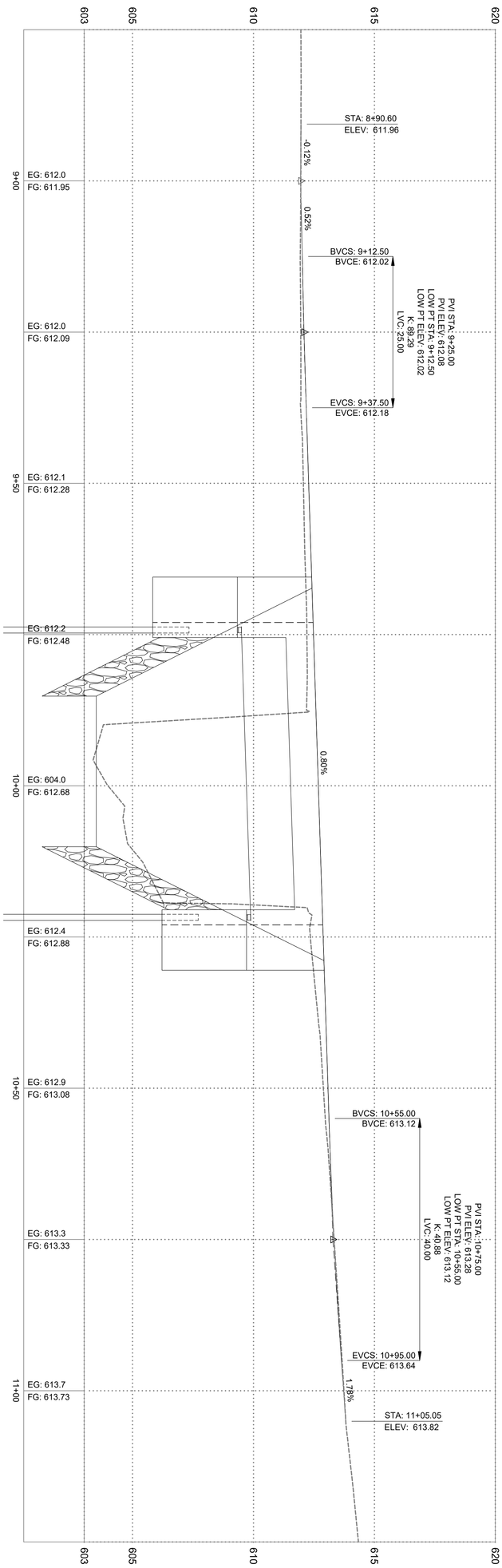

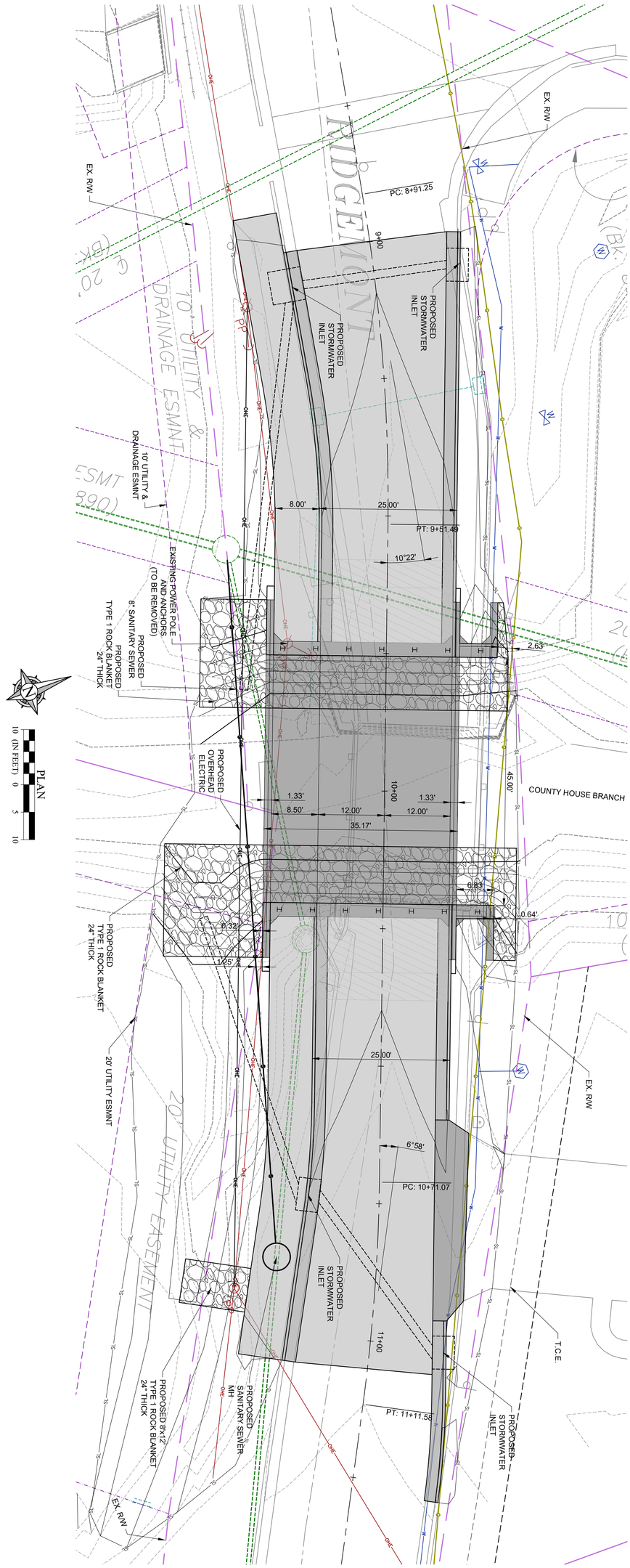

SHEET NUMBER
3
OF 28

PLAN & PROFILE

RIDGEMONT DR. BRIDGE OVER
COUTNY HOUSE BRANCH

SEC. 22 T48N, R13W

CITY OF COLUMBIA, MISSOURI

REVISIONS				DRAWING INFO.	
NO.	DESCRIPTION	BY	DATE	FIELD BY:	
				DRAWN BY:	NDO/CAW
				CHECK BY:	GDS
				DATE:	10/21/2021
				FIELD BOOK:	
				JOB NUMBER:	20KC40008

©COPYRIGHT ANDERSON ENGINEERING, INC. 2012

STATE OF MISSOURI
GARY D. STRACK
NUMBER E-20915
PROFESSIONAL ENGINEER
04/04/2022

ANDERSON ENGINEERING
EMPLOYEE OWNED
ENGINEERS • SURVEYORS • LABORATORIES • DRILLING

G:\Shared drives\40 MO\Columbia\20KC40008 Ridgemont Bridge\CADD\Plans\R_Plan & Profile

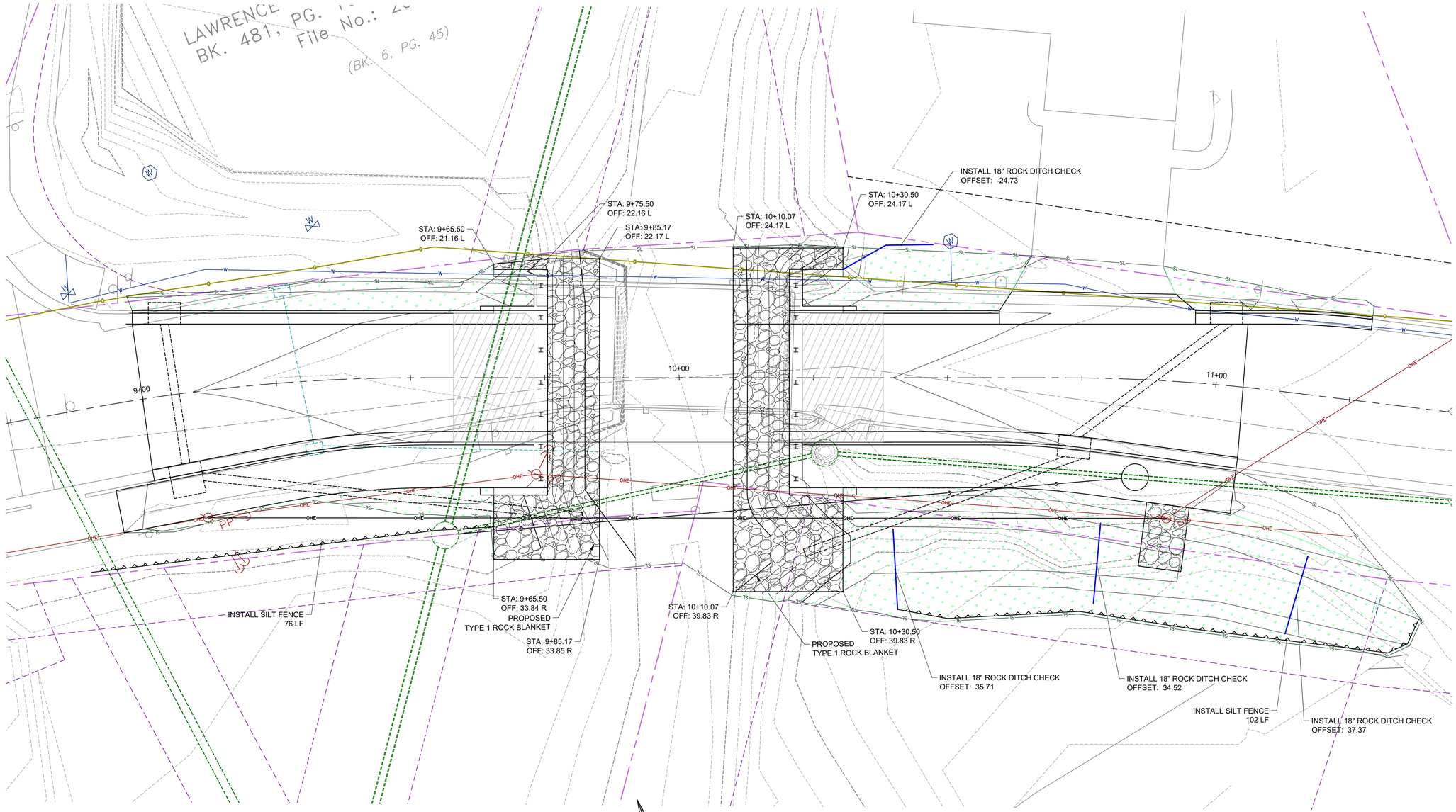

QUANTITIES:

Seeding: 0.1 Acres
Silt Fence: 114 LF
Rock Ditch Check: 63 LF

ANDERSON ENGINEERING
EMPLOYEE OWNED
ENGINEERS - SURVEYORS - LABORATORIES - DRILLING

STATE OF MISSOURI
GARY D. STRACK
NUMBER
2003022
PROFESSIONAL ENGINEER
04/04/2022

DRAWING INFO.	
FIELD BY:	
DRAWN BY:	NDO/CAW
CHECK BY:	GDS
DATE:	10/21/2021
FIELD BOOK:	
JOB NUMBER:	29KC40008

REVISIONS

NO.	DESCRIPTION	BY	DATE

©COPYRIGHT ANDERSON ENGINEERING, INC. 2012

EROSION CONTROL
RIDGEMONT DR. BRIDGE OVER
COUTNY HOUSE BRANCH
SEC. 22 T48N, R13W
CITY OF COLUMBIA, MISSOURI

SHEET NUMBER
4
OF 28

G:\Shared drives\AE MO\Columbia\29KC40008 Ridgemont Bridge\CADD\Plans\Erosion Control.dwg

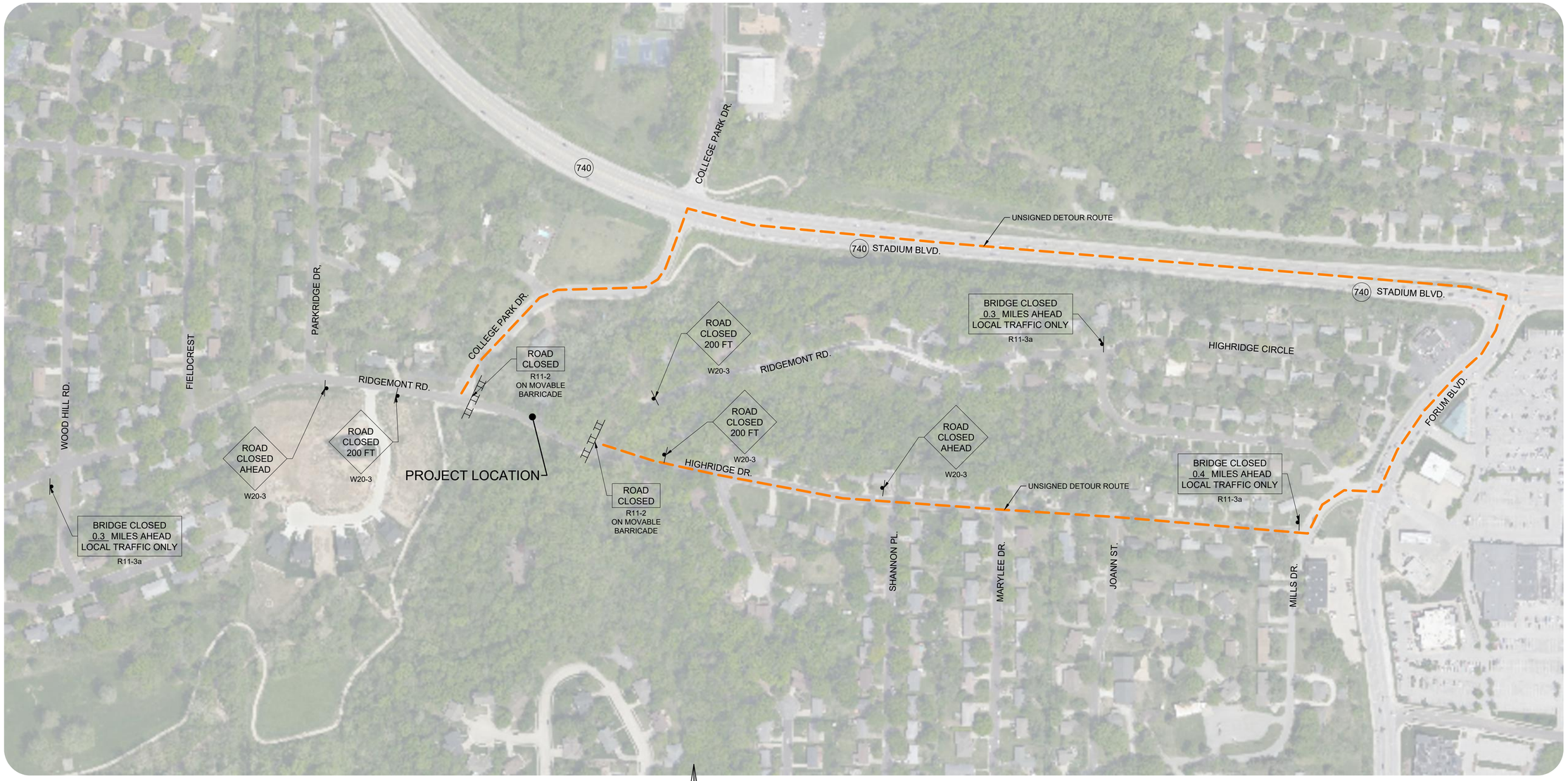

PLAN

150 (IN FEET) 0 75 150

NOTES:

TRAFFIC CONTROL SHALL COMPLY WITH THE MUTCD (2009) WITH REVISION NUMBERS 1 AND 2, AND WITH MISSOURI STANDARD SPECIFICATIONS FOR HIGHWAY CONSTRUCTION (2020)

TRAFFIC CONTROL LAYOUT, QUANTITIES AND ITEMS MAY BE ADJUSTED BY THE ENGINEER IF DEEMED NECESSARY AND WILL BE THE RESPONSIBILITY OF THE CONTRACTOR.

LEGEND

- UNSIGNED LOCAL DETOUR
- SIGN
- MOVABLE BARRICADE

SIGNING QUANTITIES

SIGN	SIZE (IN.)	AREA (S.F.)	QTY.	TOTAL AREA (S.F.)
R11-2	48x30	10.00	2	20.00
R11-3a	60x30	12.50	2	25.00
WO20-1	48x48	16.00	1	16.00
TOTAL				**61.00**

MOVABLE BARRICADE	**6**

ANDERSON ENGINEERING
EMPLOYEE OWNED
ENGINEERS · SURVEYORS · LABORATORIES · DRILLING

STATE OF MISSOURI
GARY D. STRACK
NUMBER E-32092
PROFESSIONAL ENGINEER
04/04/2022

DRAWING INFO.

FIELD BY:	
DRAWN BY:	NDO/CAW
CHECK BY:	GDS
DATE:	10/21/2021
FIELD BOOK:	
JOB NUMBER:	20KC40008

REVISIONS

NO.	DESCRIPTION	BY	DATE

©COPYRIGHT ANDERSON ENGINEERING, INC. 2012

TRAFFIC CONTROL
RIDGEMONT DR. BRIDGE OVER
COUTNY HOUSE BRANCH
SEC. 22 T48N, R13W
CITY OF COLUMBIA, MISSOURI

SHEET NUMBER
5
OF 28

G:\Shared Drives\04 MO\Columbia\20KC40008 Ridgemont Bridge\CADD\Plans\R_Traffic Control Plan

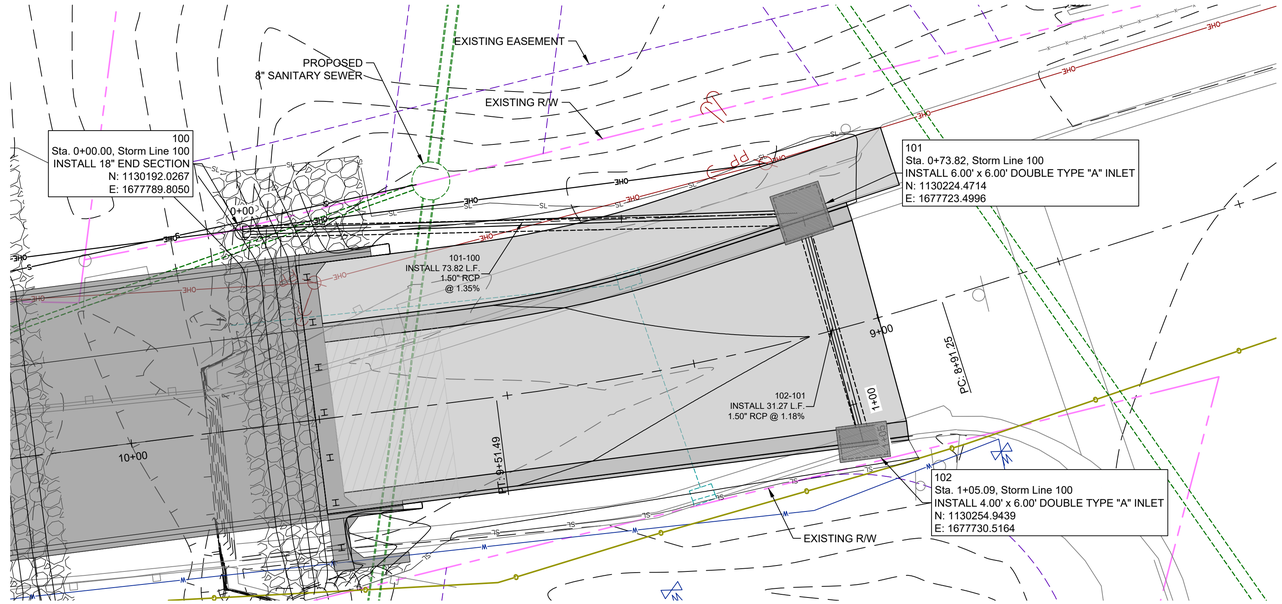

PLAN

10 (IN FEET) 0 5 10

STORM SEWER PROFILE

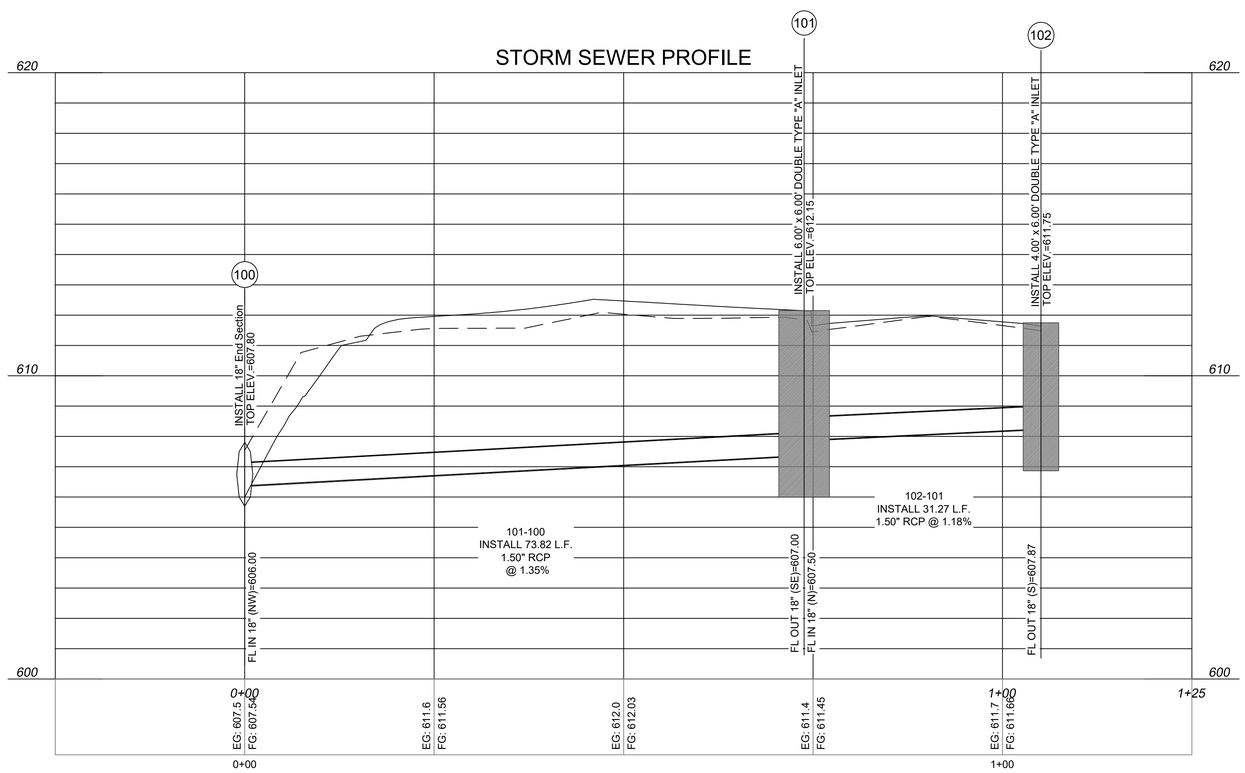

ANDERSON ENGINEERING
EMPLOYEE OWNED
ENGINEERS · SURVEYORS · LABORATORIES · DRILLING

STATE OF MISSOURI
GARY D. STRACK
NUMBER E-29972
PROFESSIONAL ENGINEER
04/04/2022

DRAWING INFO.	
FIELD BY:	
DRAWN BY:	NDO/CAW
CHECK BY:	GDS
DATE:	10/21/2021
FIELD BOOK:	
JOB NUMBER:	20KC40008

REVISIONS

NO.	DESCRIPTION	BY	DATE

©COPYRIGHT ANDERSON ENGINEERING, INC. 2012

STORM PLAN & PROFILES
RIDGEMONT DR. BRIDGE OVER
COUTNY HOUSE BRANCH
SEC. 22 T48N, R13W
CITY OF COLUMBIA, MISSOURI

SHEET NUMBER
6
OF 28

G:\Shared drives\KC MO\Columbia\20KC40008 Ridgemont Bridge\CADD\Parent\R_Storm Sewer Plan

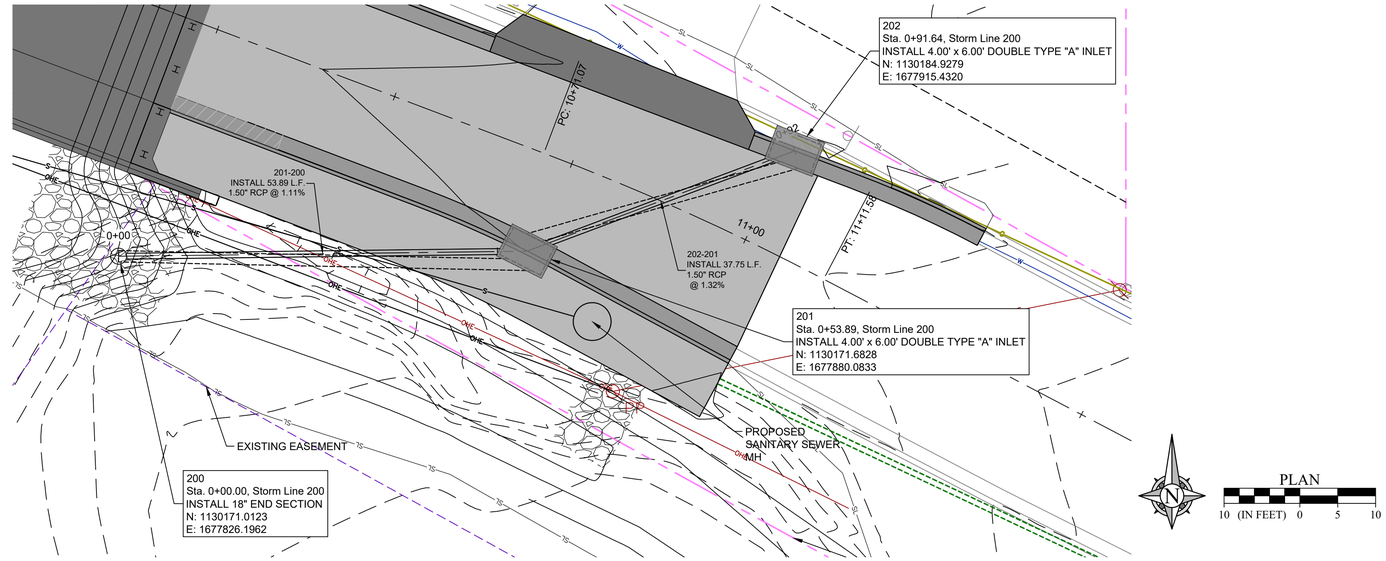

STORM SEWER PROFILE

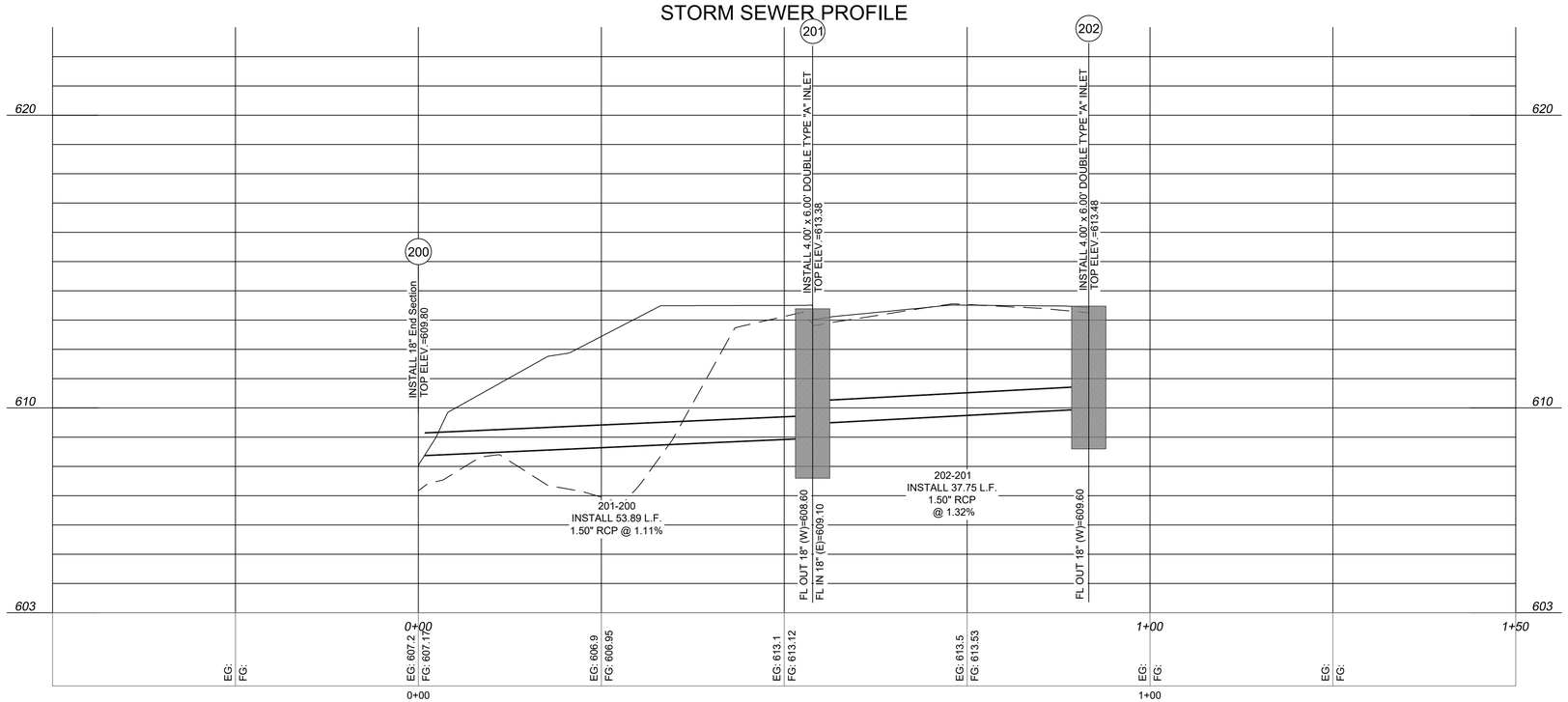

ANDERSON ENGINEERING
EMPLOYEE OWNED
ENGINEERS · SURVEYORS · LABORATORIES · DRILLING

STATE OF MISSOURI
GARY D. STRACK
NUMBER
2005022
PROFESSIONAL ENGINEER
04/04/2022

DRAWING INFO.

FIELD BY:	
DRAWN BY:	NDO/CAW
CHECK BY:	GDS
DATE:	10/21/2021
FIELD BOOK:	
JOB NUMBER:	20KC40008

REVISIONS

NO.	DESCRIPTION	BY	DATE

©COPYRIGHT ANDERSON ENGINEERING, INC. 2012

STORM PLAN & PROFILES
RIDGEMONT DR. BRIDGE OVER
COUTNY HOUSE BRANCH
SEC. 22 T48N, R13W
CITY OF COLUMBIA, MISSOURI

SHEET NUMBER
7
OF 28

G:\Shared drives\MO\Columbia\20KC40008 Ridgemont Bridge\CADD\Plans\R_Storm Sewer Plan

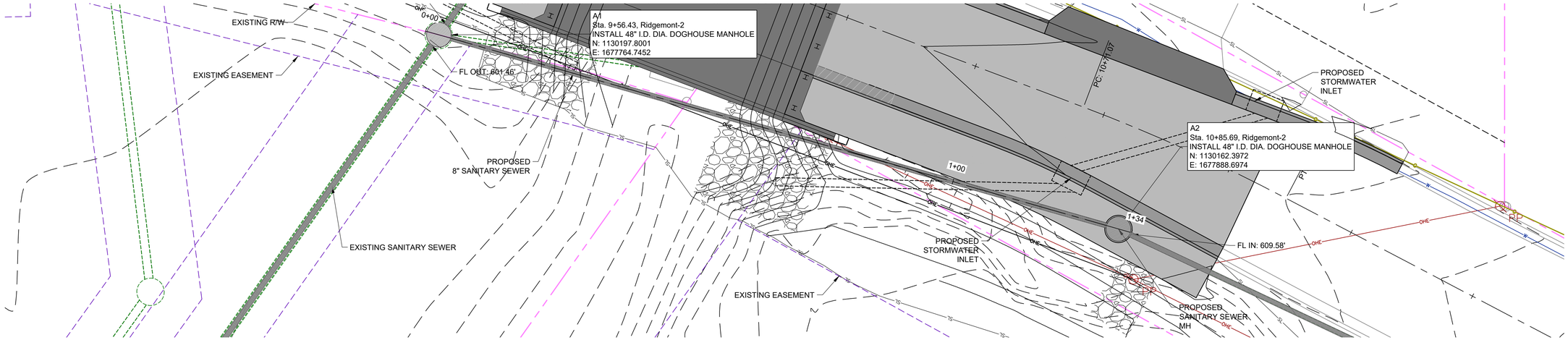

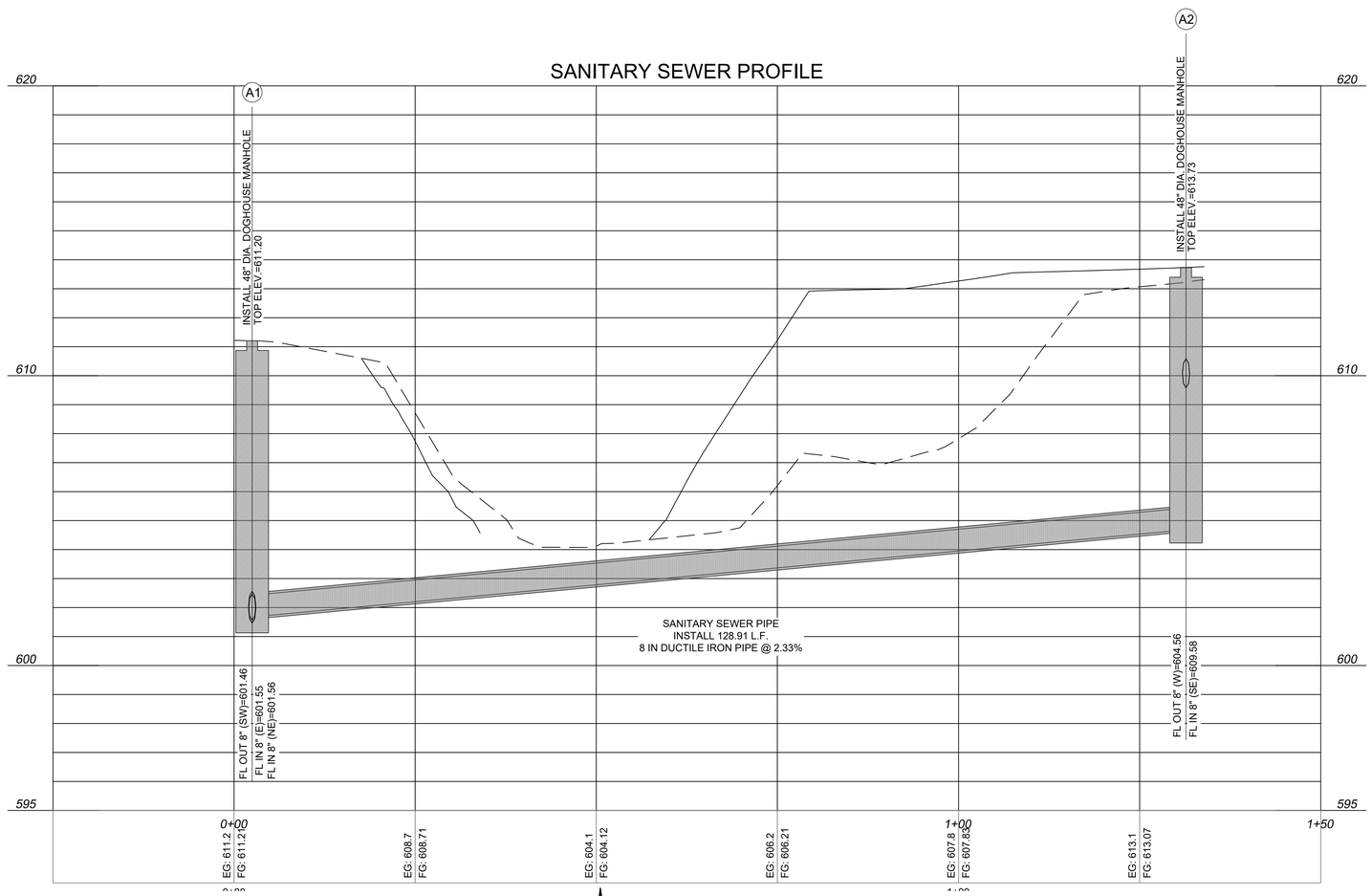

ANDERSON ENGINEERING
EMPLOYEE OWNED
ENGINEERS · SURVEYORS · LABORATORIES · DRILLING

STATE OF MISSOURI
GARY D. STRACK
NUMBER PE-2003027262
PROFESSIONAL ENGINEER
04/04/2022

DRAWING INFO.	
FIELD BY:	
DRAWN BY:	NDO/CAW
CHECK BY:	GDS
DATE:	10/21/2021
FIELD BOOK:	
JOB NUMBER:	29KC40008

REVISIONS

NO.	DESCRIPTION	BY	DATE

©COPYRIGHT, ANDERSON ENGINEERING, INC. 2012

SANITARY PLAN & PROFILES
RIDGEMONT DR. BRIDGE OVER
COUTNY HOUSE BRANCH
SEC. 22 T48N, R13W
CITY OF COLUMBIA, MISSOURI

SHEET NUMBER
8
OF 28

G:\Shared drives\AEI MO\Columbia\KC40008 Ridgemont Bridge\CADD\Permit\R_Sanitary Sewer Plan

ROADWAY QUANTITIES

ITEM NO.	DESCRIPTION	UNIT	QUANTITY
201-30.00	CLEARING AND GRUBBING	ACRE	0.1
202-20.10	REMOVAL OF IMPROVEMENTS	LUMP SUM	1
203-50.00	UNCLASSIFIED EXCAVATION	CUBIC YARD	319
203-55.00	EMBANKMENT IN PLACE	CUBIC YARD	191
609-99.03	MISC. CONCRETE CURB AND GUTTER (2.5')	LINEAR FOOT	285
403-99.05	MISC. ASPHALTIC CONCRETE, SURFACE COURSE (1.5 IN.)	SQUARE YARD	327
403-99.05	MISC. ASPHALTIC CONCRETE, BASE COURSE (7.5 IN.)	SQUARE YARD	327
310-99.05	MISC. ROCK BASE (TYPE 3) (4 IN.)	CUBIC YARD	50
611-30.10	FURNISHING TYPE 1 ROCK BLANKET	CUBIC YARD	138
611-30.30	PLACING TYPE 1 ROCK BLANKET	CUBIC YARD	138
614-99.02	MISC. DOUBLE TYPE "A" INLET (4'x6')	EACH	3
614-99.02	MISC. DOUBLE TYPE "A" INLET (6'x6')	EACH	1
614-99.02	MISC. SANITARY SEWER MANHOLE (48")	EACH	2
624-01.04A	SEPARATION GEOTEXTILE	SQUARE YARD	210
726-99.23	SEWER. STORM SEWER PIPE (RCP) (18")	LINEAR FOOT	197
726-99.23	SEWER. SANITARY SEWER PIPE (SDR 35 PVC) (8")	LINEAR FOOT	129
732-99.02	MISC. END SECTION (RCP) (18")	EACH	2
608-99.05	MISC. CONCRETE SIDEWALK (6")	SQUARE YARD	140.0
502-99.05	MISC. CONCRETE DRIVEWAY (6")	SQUARE YARD	23.0
503-99.05	GRS APPROACH SUBGRADE, GRADATION 1" CLEAN WITH GEOTEXTILE	SQUARE YARD	79.7
618-10.00	MOBILIZATION	LUMP SUM	1
627-40.00	CONTRACTOR FURNISHED SURVEYING AND STAKING	LUMP SUM	1
805-10.00A	SEEDING - COOL SEASON MIXTURES	ACRE	0.1
806-10.19	SILT FENCE	LINEAR FOOT	178
806-30.2.1	ROCK DITCH CHECK	LINEAR FOOT	63

TRAFFIC CONTROL QUANTITIES

ITEM NO.	DESCRIPTION	UNIT	QUANTITY
616	TRAFFIC CONTROL ITEMS	LS	1

BRIDGE QUANTITIES

ITEM NO.	DESCRIPTION	UNIT	QUANTITY
206-10.00	CLASS 1 EXCAVATION	CUBIC YARD	85.0
216-05.00	REMOVAL OF BRIDGES	LUMP SUM	1
608-60.08	CONCRETE SIDEWALK, 8 IN.	SQUARE YARD	18.2
617-31.00	CONCRETE TRAFFIC BARRIER, TYPE D	LINEAR FOOT	130
702-10.10	STRUCTURAL STEEL PILES (10 IN.)	LINEAR FOOT	140
702-60.00	PRE-BORE FOR PILING	LINEAR FOOT	119
702-70.00	PILE POINT REINFORCEMENT	EACH	14
703-20.03	CLASS B CONCRETE (SUBSTRUCTURE)	CUBIC YARD	37.7
703-42.12	SLAB ON STEEL	SQUARE YARD	196
712-10.00	FABRICATED STRUCTURAL CARBON STEEL (MISC)	POUND	1,060
712-11.13	FABRICATED STRUCTURAL LOW ALLOY STEEL (I-BEAM) A709, GRADE 50W	POUND	28,280
712-99.03	PEDESTRIAN RAIL	LINEAR FOOT	65
716-10.02	LAMINATED NEOPRENE BEARING PAD	EACH	14

ALL CONCRETE ABOVE THE CONSTRUCTION JOINT IN THE END BENTS IS INCLUDED IN THE ESTIMATED QUANTITIES FOR SLAB ON STEEL.

ALL REINFORCEMENT IN THE END BENTS IS INCLUDED IN THE ESTIMATED QUANTITIES FOR SLAB ON STEEL.

ALL CONCRETE AND REINFORCING STEEL IN SIDEWALK WILL BE CONSIDERED COMPLETELY COVERED BY THE CONTRACT UNIT PRICE FOR SIDEWALK (BRIDGES).

ESTIMATED QUANTITIES FOR SLAB ON STEEL

ITEM	UNIT	TOTAL
CLASS B-2 CONCRETE	CUBIC YARDS	56.4
REINFORCING STEEL (EPOXY COATED)	POUNDS	17,671

THE TABLE OF ESTIMATED QUANTITIES FOR SLAB ON STEEL REPRESENTS THE QUANTITIES USED BY THE OWNER IN PREPARING THE COST ESTIMATE FOR CONCRETE SLABS. THE AREA OF THE CONCRETE SLAB WILL BE MEASURED TO THE NEAREST SQUARE YARD WITH THE HORIZONTAL DIMENSIONS AS SHOWN ON THE PLAN OF SLAB. PAYMENT FOR PRESTRESSED PANELS, CONVENTIONAL FORMS, ALL CONCRETE AND COATED AND UNCOATED REINFORCING STEEL WILL BE CONSIDERED COMPLETELY COVERED BY THE CONTRACT UNIT PRICE FOR SLAB ON CONCRETE I-GIRDER. VARIATIONS MAY BE ENCOUNTERED IN THE ESTIMATED QUANTITIES BUT THE VARIATIONS CANNOT BE USED FOR AN ADJUSTMENT IN THE CONTRACT UNIT PRICE.

METHOD OF FORMING THE SLAB SHALL BE AS SHOWN ON THE SHOP DRAWINGS AND IN ACCORDANCE WITH SEC 703. ALL HARDWARE FOR FORMING THE SLAB TO BE LEFT IN PLACE AS A PERMANENT PART OF THE STRUCTURE SHALL BE COATED IN ACCORDANCE WITH ASTM A123 OR ASTM B633 WITH A THICKNESS CLASS SC 4 AND A FINISH TYPE I, II OR III.

THE ESTIMATED QUANTITIES FOR SLAB ON STEEL ARE BASED ON SQUARE PRECAST PRESTRESSED END PANELS.

CLASS B-2 CONCRETE QUANTITY IS BASED ON MINIMUM TOP FLANGE THICKNESS AND MINIMUM JOINT MATERIAL THICKNESS.

THE PRESTRESSED PANEL QUANTITIES ARE NOT INCLUDED IN THE TABLE OF ESTIMATED QUANTITIES FOR SLAB ON STEEL.

FOUNDATION DATA

TYPE	DESIGN DATA		BENT NUMBER 1	BENT NUMBER 2
LOAD BEARING PILE	PILE TYPE AND SIZE		HP 10x42	HP 10x42
	NUMBER	EACH	7	7
	APPROXIMATE LENGTH PER EACH	FEET	10	10
	PILE POINT REINFORCEMENT	EACH	7	7
	PILE DRIVING VERIFICATION METHOD		DF	DF
	HAMMER ENERGY REQUIRED	FT-LB	12,555	12,555
	DESIGN BEARING MINIMUM NOMINAL AXIAL COMPRESSIVE RESISTANCE	KIP	111	111

DF = FHWA-MODIFIED GATES DYNAMIC FORMULA

LOAD BEARING PILE:
MINIMUM NOMINAL AXIAL COMPRESSIVE RESISTANCE = MAXIMUM FACTORED LOADS/RESISTANCE FACTORS

MINIMUM ENERGY REQUIREMENT OF HAMMER IS BASED ON PLAN LENGTH AND DESIGN BEARING VALUE OF PILES. ALL PILES SHALL BE DRIVEN TO PRACTICAL REFUSAL.

MINIMUM PILE LENGTHS SHALL BE IN ACCORDANCE WITH SECTION 702.4.11 OF THE STANDARD SPECIFICATIONS.

PAYMENT FOR PILE SPLICES WILL ONLY BE MADE FOR PILES REACHING LENGTHS BEYOND 40 FEET.

EMBANKMENT IN PLACE SHALL INCLUDE HAULING AND REMOVING MATERIAL FROM/TO THE SITE, PLACEMENT AND COMPACTION OF MATERIAL AND EXCAVATION OF DITCHES TO MAKE GRADE SHOWN ON PLANS. PAYMENT WILL ONLY BE MADE FOR FILL MATERIAL PLACED PER PLAN REQUIREMENTS.

NOTE:
THE PILE POINT REINFORCEMENT SHALL BE A ONE-PIECE UNIT OF CAST STEEL. THE CUTTING EDGES SHALL BE HARDENED. THE PILE POINT SHALL BE DESIGNED TO PENETRATE BOULDERS WITHOUT DAMAGE TO THE PILE. THE PILE POINTS SHALL BE WELDED, IN ACCORDANCE WITH MANUFACTURER'S RECOMMENDATIONS, TO EACH STEEL PILE AT THE END BENT BEFORE DRIVING.

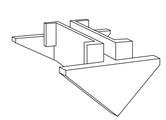

CAST STEEL PILE POINT

GENERAL NOTES:

DESIGN SPECIFICATIONS:

2020 AASHTO LRFD BRIDGE DESIGN SPECIFICATIONS (9TH ED.)
SEISMIC PERFORMANCE CATEGORY A

2019 AASHTO GUIDELINES FOR GEOMETRIC DESIGN OF VERY LOW-VOLUME LOCAL ROADS (ADT≤400)

CONSTRUCTION SPECIFICATIONS:

MISSOURI STANDARD SPECIFICATIONS FOR HIGHWAY CONSTRUCTION

MISSOURI STANDARD PLANS FOR HIGHWAY CONSTRUCTION

DESIGN LOADING:

HS20-44
FATIGUE STRESS - CASE III
FUTURE WEARING SURFACE = 35 LB/SF
EARTH PRESSURE = 120 LB/CF
EQUIVALENT FLUID PRESSURE = 45 LB/CF
SUPERSTRUCTURE:
SIMPLY SUPPORTED NON-COMPOSITE FOR DEAD LOAD.
COMPOSITE FOR LIVE LOAD.

DESIGN UNIT STRESSES:

CLASS B CONCRETE (SUBSTRUCTURE)	f'c = 3,000 p.s.i.
CLASS B-1 CONCRETE (BARRIER)	f'c = 4,000 p.s.i.
CLASS B-2 CONCRETE (SUPERSTRUCTURE, EXCEPT BARRIER)	f'c = 4,000 p.s.i.
REINFORCING STEEL (GRADE 60)	fy = 60,000 p.s.i.
STRUCTURAL CARBON STEEL (ASTM A709 GRADE 36)	fy = 36,000 p.s.i.
STRUCTURAL STEEL (ASTM A709 GRADE 50W)	fy = 50,000 p.s.i.
STEEL PILE (ASTM A709 GRADE 50)	fy = 50,000 p.s.i.

FOR PRECAST PRESTRESSED PANEL STRESSES, SEE SHEET NO. 19.

NEOPRENE PADS:

NEOPRENE BEARING PADS SHALL BE 60 DUROMETER AND SHALL BE IN ACCORDANCE WITH SEC 716.

JOINT FILLER:

ALL JOINT FILLER SHALL BE IN ACCORDANCE WITH SEC 1057 FOR PREFORMED SPONGE RUBBER EXPANSION AND PARTITION JOINT FILLER, EXCEPT AS NOTED.

REINFORCING STEEL:

MINIMUM CLEARANCE TO THE REINFORCING STEEL SHALL BE 1-1/2 INCHES, UNLESS OTHERWISE SHOWN.

TRAFFIC HANDLING:

STRUCTURE TO BE CLOSED DURING CONSTRUCTION. TRAFFIC TO BE MAINTAINED ON OTHER ROUTES DURING CONSTRUCTION. SEE ROADWAY PLANS FOR TRAFFIC CONTROL.

NOTE:

QUANTITIES SHOWN ON THESE PLANS ARE NOT GUARANTEED BY THE OWNER AND ARE USED SOLELY FOR THE PURPOSE OF COMPARING BIDS AND AWARDING THE CONTRACT, AND MAY OR MAY NOT REPRESENT THE ACTUAL QUANTITIES ON THE JOB, SEE SPECIFICATIONS.

ANY ITEMS NOT SHOWN IN BID TAB, SHALL BE CONSIDERED SUBSIDIARY TO OTHER ITEMS.

IT SHALL BE THE RESPONSIBILITY OF THE CONTRACTOR TO SUBMIT FORM 106, TO MISSOURI DEPARTMENT OF NATURAL RESOURCES, HISTORIC PRESERVATION PROGRAM FOR ANY BORROW AREAS TO BE USED ON THIS PROJECT.

ANDERSON ENGINEERING
EMPLOYEE OWNED
ENGINEERS · SURVEYORS · LABORATORIES · DRILLING

STATE OF MISSOURI
GARY D. STRUCK
NUMBER PE-2003027024
PROFESSIONAL ENGINEER
04/04/2022

DRAWING INFO.
FIELD BY:
DRAWN BY: CAW
CHECK BY: GDS
DATE: 10/29/2020
FIELD BOOK:
JOB NUMBER: 20KC40008

REVISIONS

NO.	DESCRIPTION	BY	DATE

©COPYRIGHT ANDERSON ENGINEERING, INC. 2012

GENERAL NOTES & QUANTITIES
RIDGEMONT DR. BRIDGE OVER COUNTY HOUSE BRANCH
SEC. 22 T48N, R13W
CITY OF COLUMBIA, MISSOURI

G:\My Drive\Quick\2008 - Ridgemont Bridge\CAD\Plans\9_General Notes & Quantities

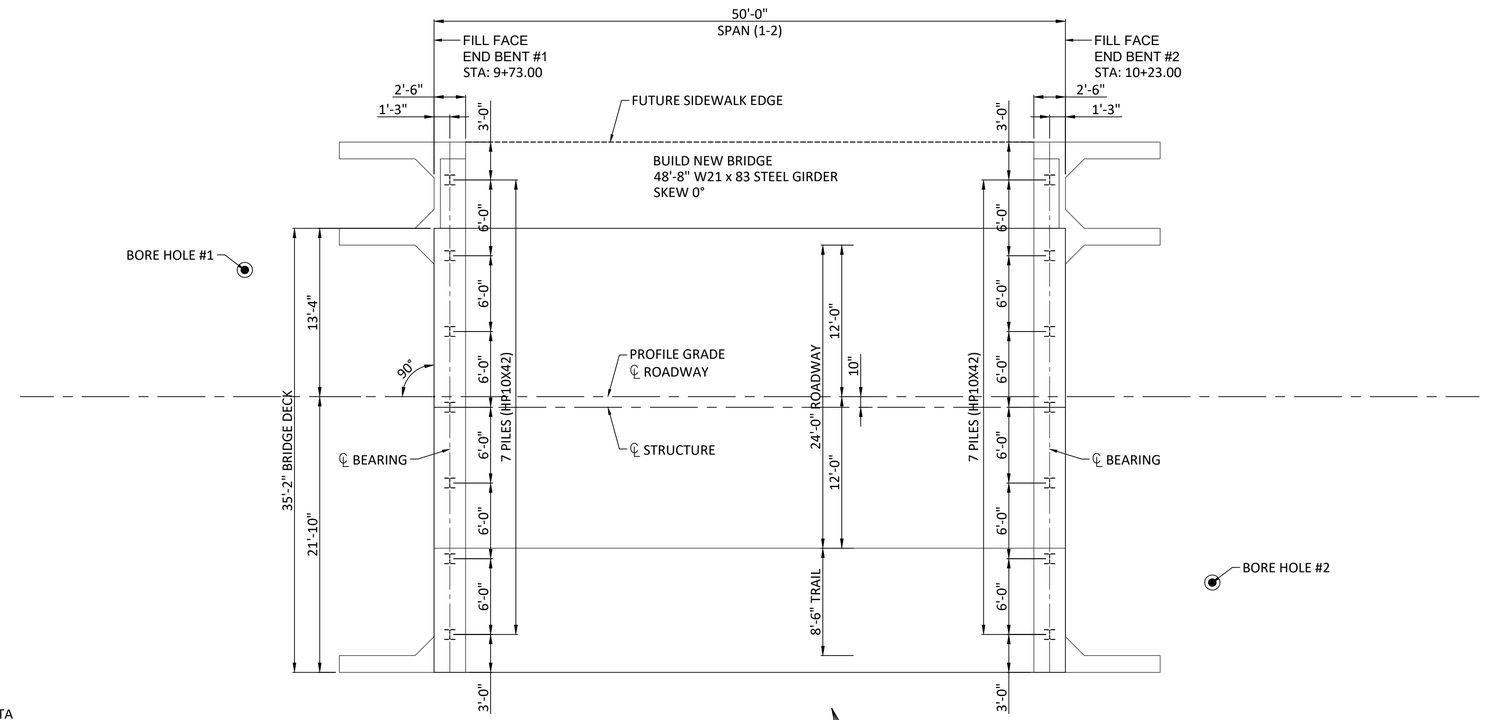

BRIDGE PLAN

◉ INDICATES LOCATION OF BORINGS.

NOTICE AND DISCLAIMER REGARDING BORING LOG DATA

THE LOCATIONS OF ALL SUBSURFACE BORINGS FOR THIS STRUCTURE ARE SHOWN ON THE BRIDGE PLAN SHEET(S) FOR THIS STRUCTURE. BORING DATA FOR ALL LOCATIONS IS SHOWN ON SHEET NO. B2. THE BORING DATA FOR ALL LOCATIONS INDICATED, AS WELL AS ANY OTHER BORING LOGS OR OTHER FACTUAL RECORDS OF SUBSURFACE DATA AND INVESTIGATIONS PERFORMED BY THE DEPARTMENT FOR THE DESIGN OF THE PROJECT, WILL BE PROVIDED IN THE BRIDGE ELECTRONIC DELIVERABLE FILE OR WILL BE AVAILABLE FROM THE PROJECT CONTACT UPON WRITTEN REQUEST. NO GREATER SIGNIFICANCE OR WEIGHT SHOULD BE GIVEN TO THE BORING DATA DEPICTED ON THE PLAN SHEETS THAN IS SUBSURFACE DATA AVAILABLE FROM THE DISTRICT OR ELSEWHERE.

THE COMMISSION DOES NOT REPRESENT OR WARRANT THAT ANY SUCH BORING DATA ACCURATELY DEPICTS THE CONDITIONS TO BE ENCOUNTERED IN CONSTRUCTING THIS PROJECT. A CONTRACTOR ASSUMES ALL RISKS IT MAY ENCOUNTER IN BASING ITS BID PRICES, TIME OR SCHEDULE OF PERFORMANCE ON THE BORING DATA DEPICTED HERE OR THOSE AVAILABLE FROM THE DISTRICT, OR ON ANY OTHER DOCUMENTATION NOT EXPRESSLY WARRANTED, WHICH THE CONTRACTOR MAY OBTAIN FROM THE COMMISSION.

HYDROLOGIC DATA
DRAINAGE AREA = 1.05 SQ. MI.
DESIGN FLOOD FREQUENCY = 100 YEARS
DESIGN FLOOD DISCHARGE = 3,486 CFS
DESIGN FLOOD (D.F.) ELEVATION = 613.70
BASE FLOOD (100-YEAR)
BASE FLOOD ELEVATION = 613.70
BASE FLOOD DISCHARGE = 3,486 CFS
ESTIMATED BACKWATER = 1.50 FT
FREEBOARD (10-YEAR)
FREEBOARD = -0.25 FT (HIGH SIDE)
ROADWAY OVERTOPPING
OVERTOPPING FLOOD DISCHARGE = 2,220 CFS
OVERTOPPING FLOOD FREQUENCY = 10 YEARS
OVERTOPPING FLOOD ELEVATION = 611.95

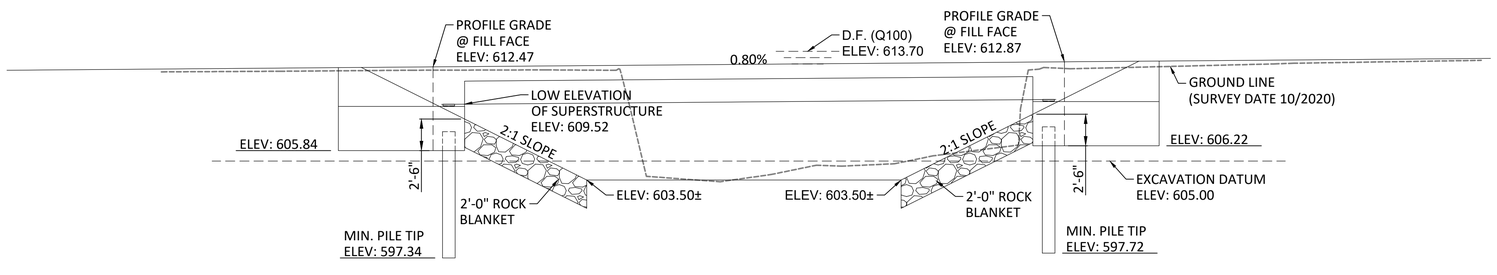

BRIDGE PROFILE

ANDERSON ENGINEERING
EMPLOYEE OWNED
ENGINEERS · SURVEYORS · LABORATORIES · DRILLING

STATE OF MISSOURI
GARY D. STRACK
NUMBER PE-2004019890
04/04/2022
PROFESSIONAL ENGINEER

DRAWING INFO.	
FIELD BY:	
DRAWN BY:	CAW
CHECK BY:	GDS
DATE:	10/29/2020
FIELD BOOK:	
JOB NUMBER:	20KC40008

REVISIONS

NO.	DESCRIPTION	BY	DATE

©COPYRIGHT ANDERSON ENGINEERING, INC. 2012

BRIDGE PLAN & PROFILE
RIDGEMONT DR. BRIDGE OVER
COUNTY HOUSE BRANCH
SEC. 22 T48N, R13W
CITY OF COLUMBIA, MISSOURI

SHEET NUMBER
10
OF 28

G:\My Drives\20kc40008 - ridgemont bridge\CADD\Plans\B_Bridge Plan & Profile

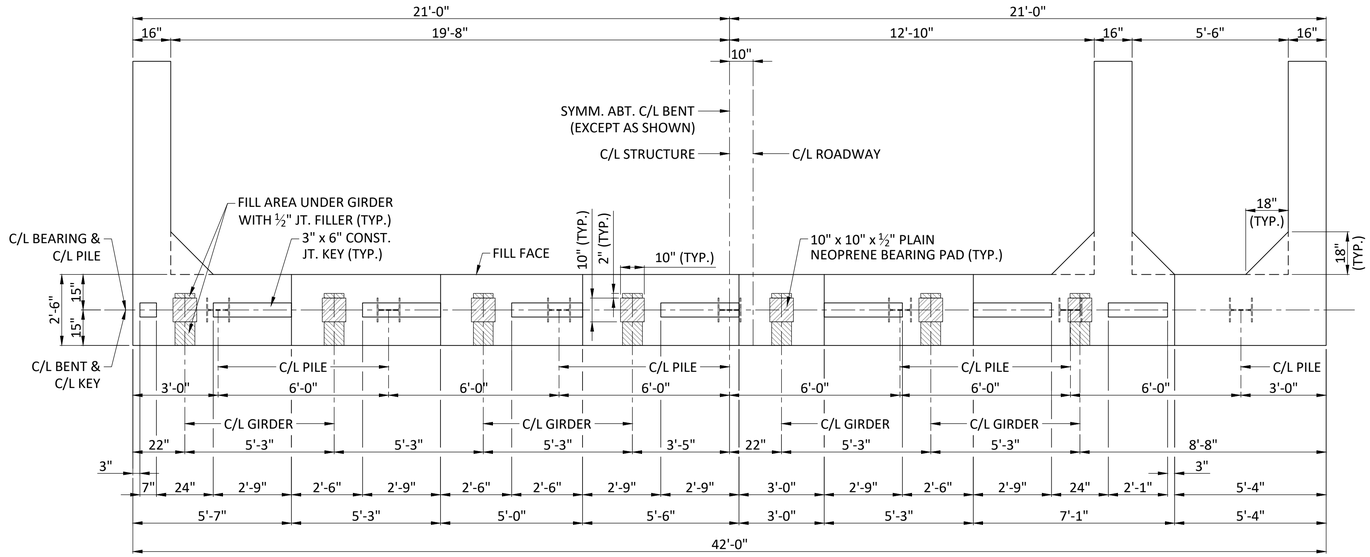

PLAN OF BEAM

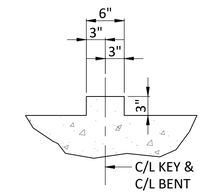

SECTION THRU KEY

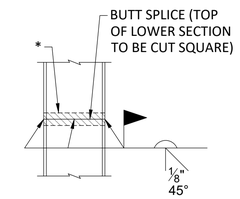

STEEL PILE SPLICE

(IF REQUIRED)

* GALVANIZING MATERIAL SHALL BE OMITTED OR REMOVED ONE INCH CLEAR OF WELD LOCATIONS IN ACCORDANCE WITH SEC 702.

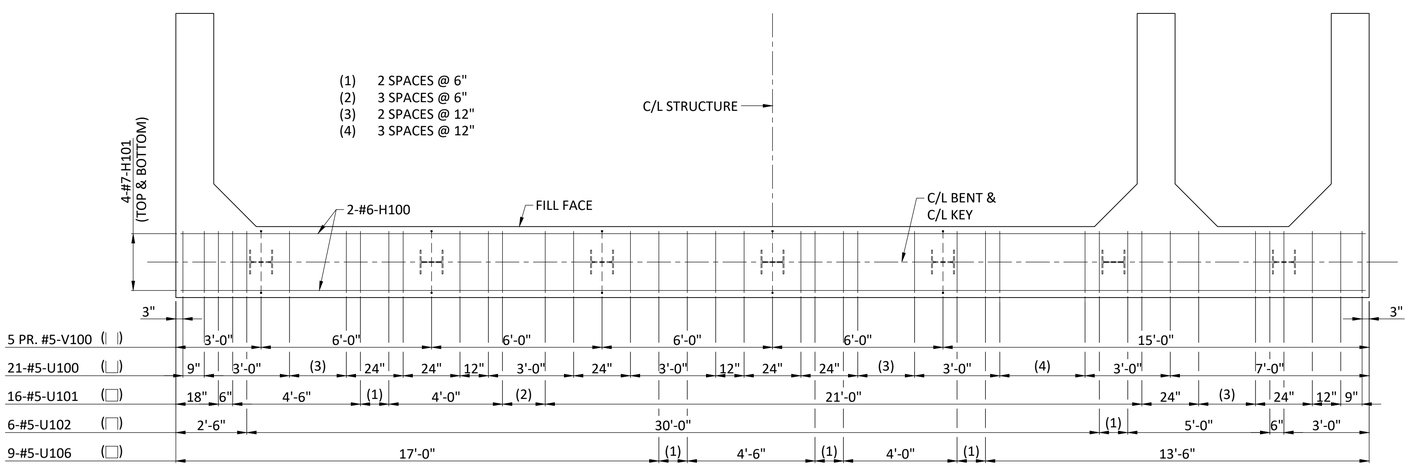

PLAN OF BEAM SHOWING REINFORCEMENT

KEYS NOT SHOWN FOR CLARITY.

GENERAL NOTES:

WORK THIS SHEET WITH SHEETS NO. 12 & 13.

ALL U BARS AND PAIRS OF V BARS SHALL BE PLACED PARALLEL TO CENTERLINE OF ROADWAY.

REINFORCING STEEL SHALL BE SHIFTED TO CLEAR PILES. U BARS SHALL CLEAR PILES BY AT LEAST 1 ½ INCHES.

SUBSTRUCTURE QUANTITY TABLE FOR BENT NO. 1		
ITEM		QUANTITY
CLASS 1 EXCAVATION	CU. YARD	43.0
GALVANIZED STRUCTURAL STEEL PILES (12 IN.)	LINEAR FOOT	70
PRE-BORE FOR PILING	LINEAR FOOT	59.5
PILE POINT REINFORCEMENT	EACH	7
CLASS B CONCRETE (SUBSTRUCTURE)	CU. YARD	18.8

THESE QUANTITIES ARE INCLUDED IN THE ESTIMATED QUANTITIES TABLE ON SHEET NO. 9

ANDERSON ENGINEERING
EMPLOYEE OWNED
ENGINEERS · SURVEYORS · LABORATORIES · DRILLING

STATE OF MISSOURI
GARY D. STRACK
NUMBER PE-2003027000
04/04/2022
PROFESSIONAL ENGINEER

DRAWING INFO.
FIELD BY:
DRAWN BY: CAW
CHECK BY: GDS
DATE: 10/29/2020
FIELD BOOK:
JOB NUMBER: 20KC40008

REVISIONS

NO.	DESCRIPTION	BY	DATE

©COPYRIGHT ANDERSON ENGINEERING, INC. 2012

END BENT 1
RIDGEMONT DR. BRIDGE OVER
COUNTY HOUSE BRANCH
SEC. 22 T48N, R13W
CITY OF COLUMBIA, MISSOURI

SHEET NUMBER
11
OF 28

G:\My Drive\20kc40008 - ridgemont bridge\CADD\Plans\B_End Bent 1

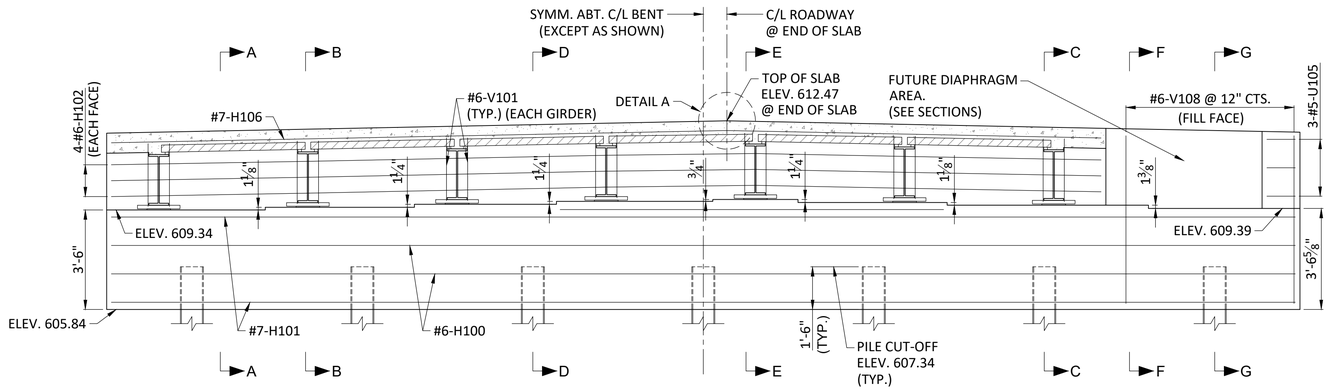

SECTION NEAR END BENT

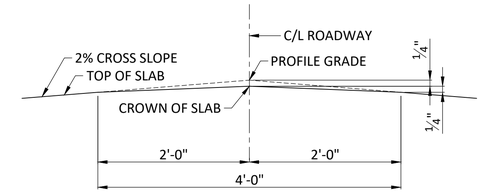

DETAIL A

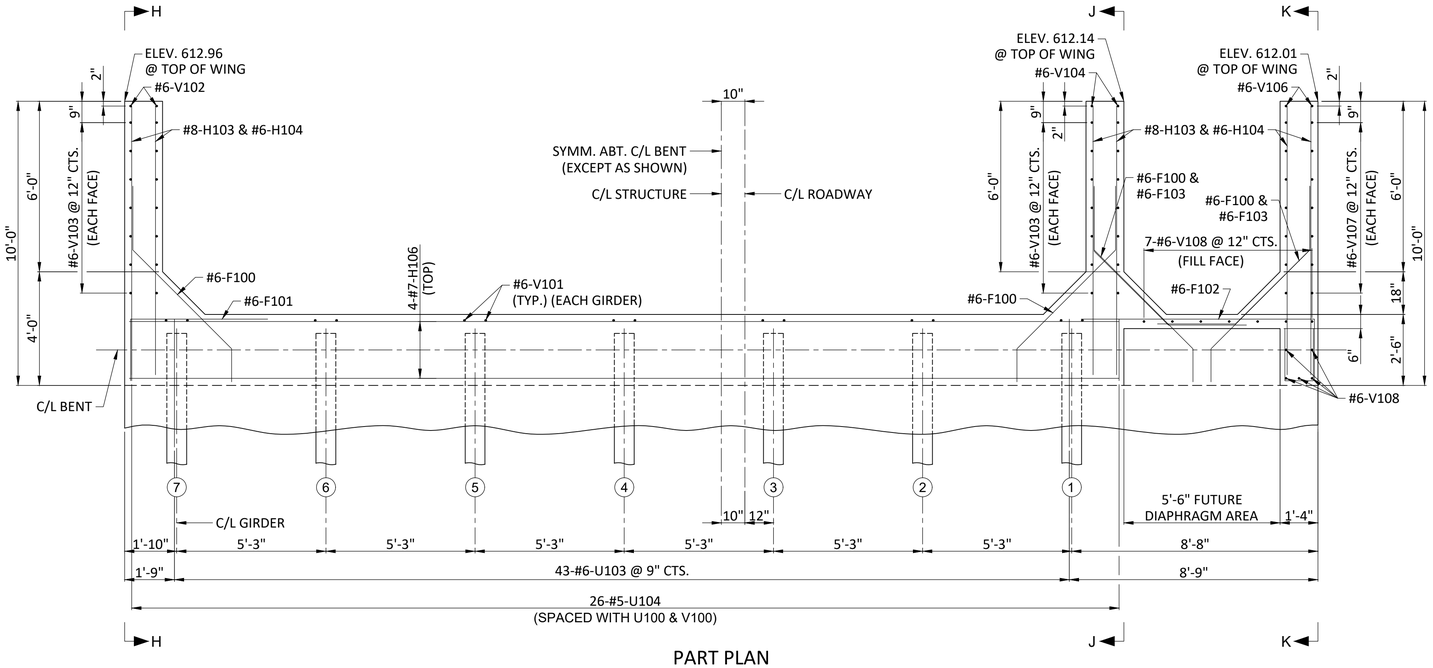

PART PLAN

GENERAL NOTES:

WORK THIS SHEET WITH SHEETS NO. 11 & 13.

FOR SECTIONS AND ELEVATIONS SEE SHEET NO. 13

THE #6-F100 BARS SHALL BE BENT IN THE FIELD TO CLEAR GIRDERS.

ALL U BARS AND PAIRS OF V BARS SHALL BE PLACED PARALLEL TO CENTERLINE OF ROADWAY.

ALL CONCRETE IN THE END BENT ABOVE TOP OF BEAM AND BELOW TOP OF SLAB SHALL BE CLASS B-2.

ANDERSON ENGINEERING
EMPLOYEE OWNED
ENGINEERS · SURVEYORS · LABORATORIES · DRILLING

STATE OF MISSOURI
GARY D. STRACK
NUMBER
2005038
04/04/2022
PROFESSIONAL ENGINEER

DRAWING INFO.

FIELD BY:	
DRAWN BY:	CAW
CHECK BY:	GDS
DATE:	10/29/2020
FIELD BOOK:	
JOB NUMBER:	20KC40008

REVISIONS

NO.	DESCRIPTION	BY	DATE

©COPYRIGHT ANDERSON ENGINEERING, INC. 2012

END BENT 1
RIDGEMONT DR. BRIDGE OVER
COUNTY HOUSE BRANCH
SEC. 22 T48N, R13W
CITY OF COLUMBIA, MISSOURI

SHEET NUMBER
12
OF 28

G:\My Drive\20kc40008 - ridgemont bridge\CADD\Plans\B_End Bent 1

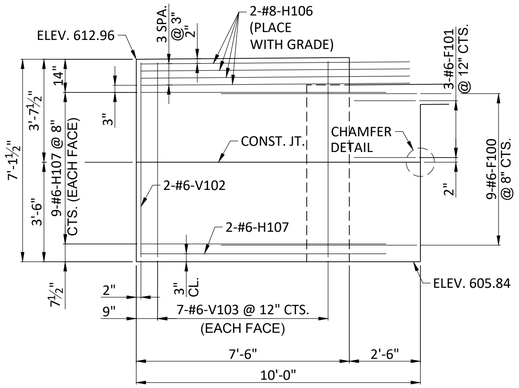

ELEVATION H-H

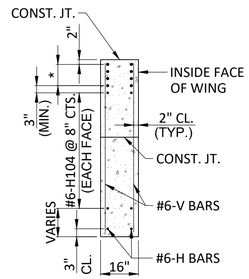

TYPICAL SECTION THRU WING

* #8-H BARS AT 3" CTS. (EACH FACE) (PLACE WITH GRADE)

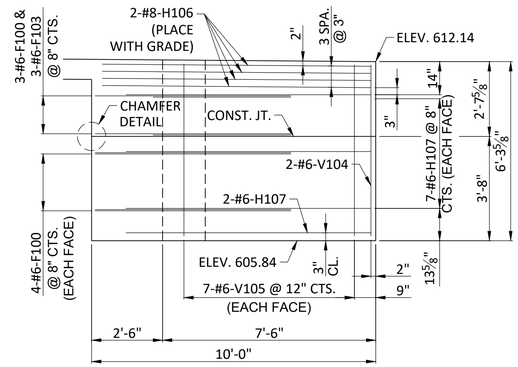

ELEVATION J-J

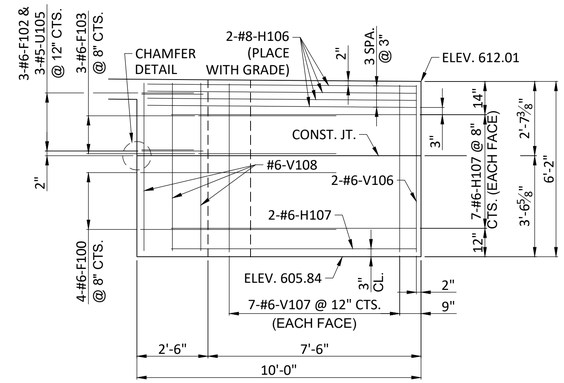

ELEVATION K-K

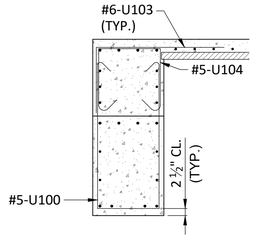

SECTION A-A

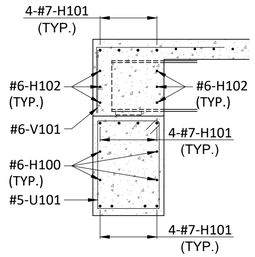

SECTION B-B

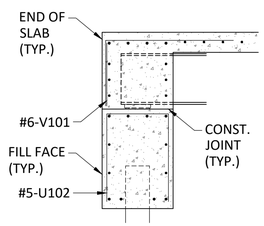

SECTION C-C

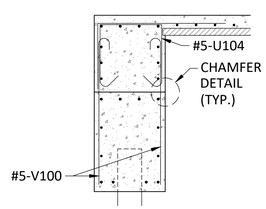

SECTION D-D

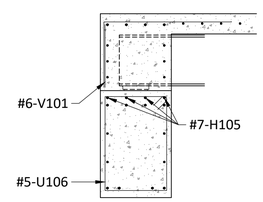

SECTION E-E

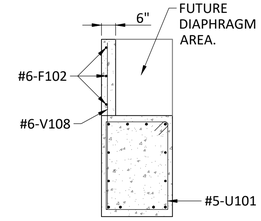

SECTION F-F

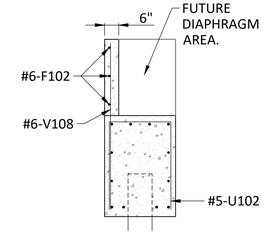

SECTION G-G

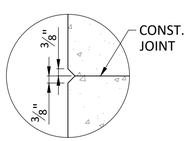

CHAMFER DETAIL

GENERAL NOTES:

WORK THIS SHEET WITH SHEETS NO. 11 & 12.

FOR SECTIONS AND ELEVATIONS SEE SHEET NO. 12

THE #6-F100 BARS SHALL BE BENT IN THE FIELD TO CLEAR GIRDERS.

ALL U BARS AND PAIRS OF V BARS SHALL BE PLACED PARALLEL TO CENTERLINE OF ROADWAY.

ALL CONCRETE IN THE END BENT ABOVE TOP OF BEAM AND BELOW TOP OF SLAB SHALL BE CLASS B-2.

ANDERSON ENGINEERING
EMPLOYEE OWNED
ENGINEERS · SURVEYORS · LABORATORIES · DRILLING

STATE OF MISSOURI · GARY D. STRACK · NUMBER 2005038 · 04/04/2022 · PROFESSIONAL ENGINEER

DRAWING INFO.	
FIELD BY:	
DRAWN BY:	CAW
CHECK BY:	GDS
DATE:	10/29/2020
FIELD BOOK:	
JOB NUMBER:	20KC40008

REVISIONS

NO.	DESCRIPTION	BY	DATE

©COPYRIGHT ANDERSON ENGINEERING, INC. 2012

END BENT 1

RIDGEMONT DR. BRIDGE OVER COUNTY HOUSE BRANCH

SEC. 22 T48N, R13W

CITY OF COLUMBIA, MISSOURI

SHEET NUMBER 13 OF 28

G:\My Drives\Jobs\0008 - ridgemont bridge\CAD\Plans\B_End Bent 1

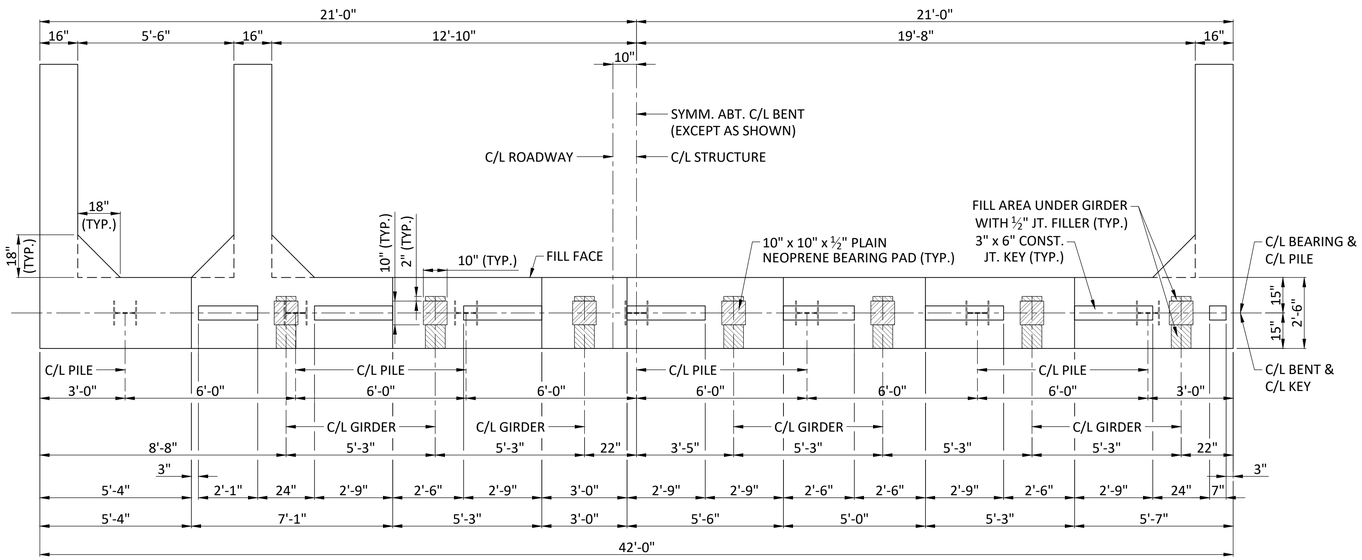

PLAN OF BEAM

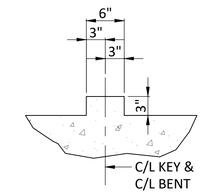

SECTION THRU KEY

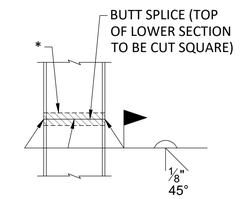

STEEL PILE SPLICE

(IF REQUIRED)

* GALVANIZING MATERIAL SHALL BE OMITTED OR REMOVED ONE INCH CLEAR OF WELD LOCATIONS IN ACCORDANCE WITH SEC 702.

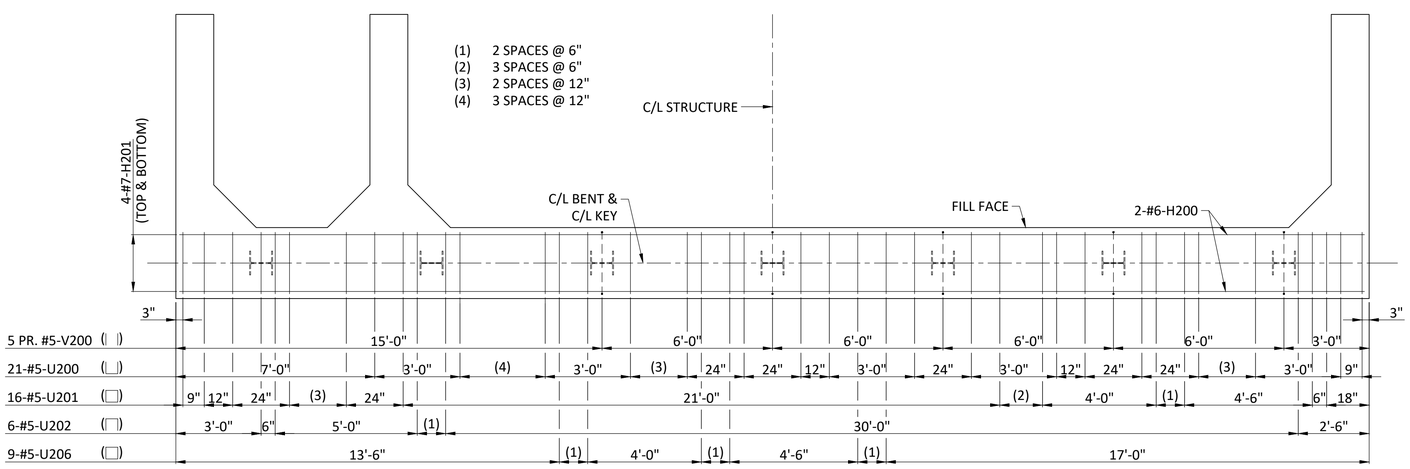

PLAN OF BEAM SHOWING REINFORCEMENT

KEYS NOT SHOWN FOR CLARITY.

GENERAL NOTES:

WORK THIS SHEET WITH SHEETS NO. 15 & 16.

ALL U BARS AND PAIRS OF V BARS SHALL BE PLACED PARALLEL TO CENTERLINE OF ROADWAY.

REINFORCING STEEL SHALL BE SHIFTED TO CLEAR PILES. U BARS SHALL CLEAR PILES BY AT LEAST 1 ½ INCHES.

SUBSTRUCTURE QUANTITY TABLE FOR BENT NO. 2		
ITEM		QUANTITY
CLASS 1 EXCAVATION	CU. YARD	41.8
GALVANIZED STRUCTURAL STEEL PILES (12 IN.)	LINEAR FOOT	70
PRE-BORE FOR PILING	LINEAR FOOT	59.5
PILE POINT REINFORCEMENT	EACH	7
CLASS B CONCRETE (SUBSTRUCTURE)	CU. YARD	18.8

THESE QUANTITIES ARE INCLUDED IN THE ESTIMATED QUANTITIES TABLE ON SHEET NO. 9

ANDERSON ENGINEERING
EMPLOYEE OWNED
ENGINEERS · SURVEYORS · LABORATORIES · DRILLING

STATE OF MISSOURI
GARY D. STRACK
NUMBER 2003038
04/04/2022
PROFESSIONAL ENGINEER

DRAWING INFO.
FIELD BY:
DRAWN BY: CAW
CHECK BY: GDS
DATE: 10/29/2020
FIELD BOOK:
JOB NUMBER: 20KC40008

REVISIONS

NO.	DESCRIPTION	BY	DATE

©COPYRIGHT ANDERSON ENGINEERING, INC. 2012

END BENT 2
RIDGEMONT DR. BRIDGE OVER
COUNTY HOUSE BRANCH
SEC. 22 T48N, R13W
CITY OF COLUMBIA, MISSOURI

SHEET NUMBER
14
OF 28

G:\My Drive\20KJ0008 - Ridgemont bridge\CADD\Plans\B_End Bent 2

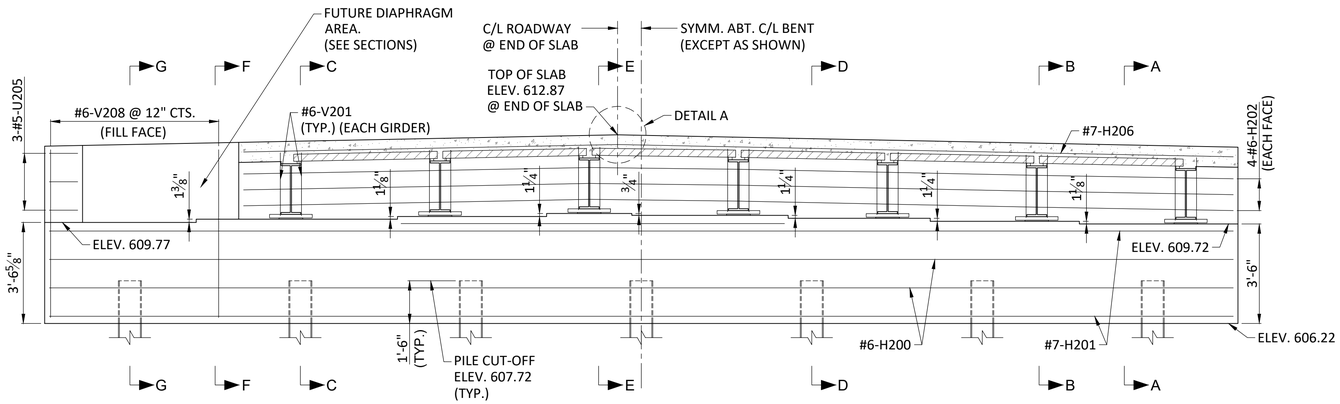

SECTION NEAR END BENT

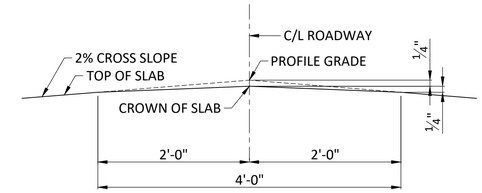

DETAIL A

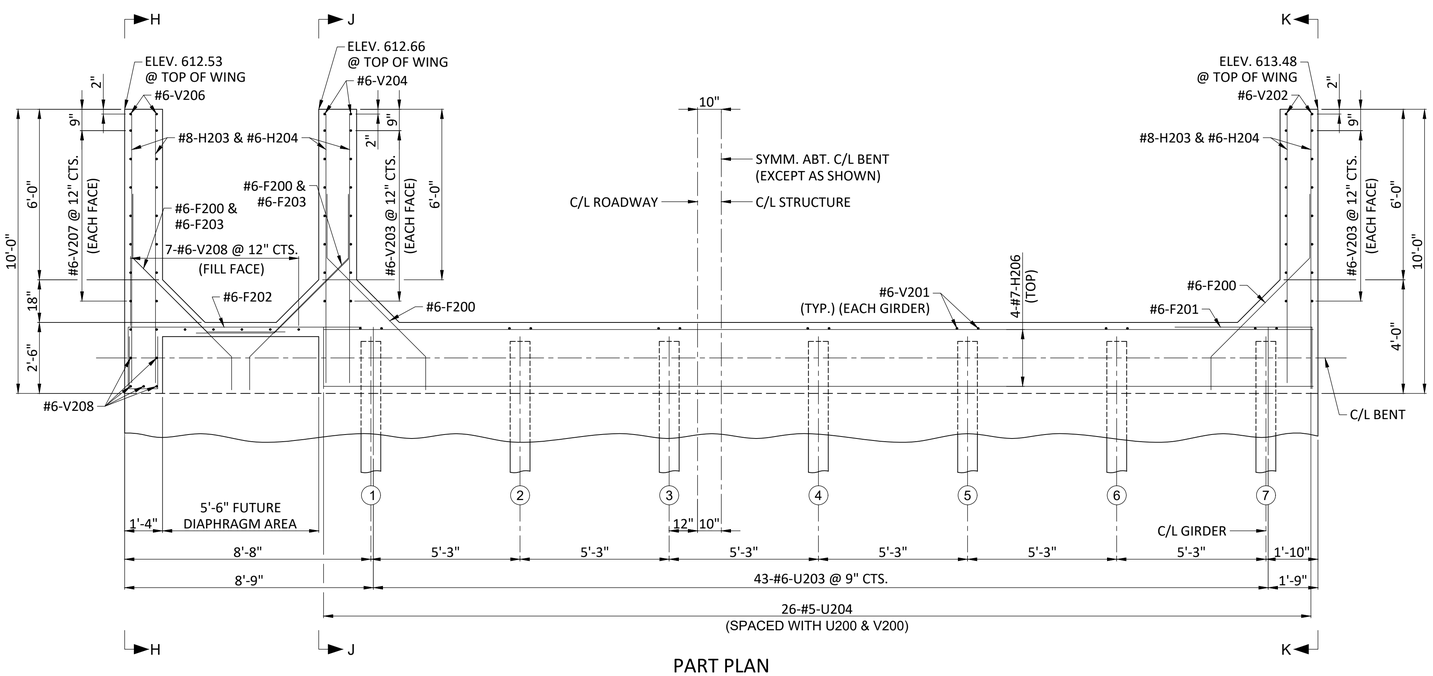

PART PLAN

GENERAL NOTES:

WORK THIS SHEET WITH SHEETS NO. 14 & 16.

FOR SECTIONS AND ELEVATIONS SEE SHEET NO. 16

THE #6-F200 BARS SHALL BE BENT IN THE FIELD TO CLEAR GIRDERS.

ALL U BARS AND PAIRS OF V BARS SHALL BE PLACED PARALLEL TO CENTERLINE OF ROADWAY.

ALL CONCRETE IN THE END BENT ABOVE TOP OF BEAM AND BELOW TOP OF SLAB SHALL BE CLASS B-2.

ANDERSON ENGINEERING
EMPLOYEE OWNED
ENGINEERS · SURVEYORS · LABORATORIES · DRILLING

STATE OF MISSOURI · GARY D. STRACK · NUMBER E-29972 · 04/04/2022 · PROFESSIONAL ENGINEER

DRAWING INFO.

FIELD BY:	
DRAWN BY:	CAW
CHECK BY:	GDS
DATE:	10/29/2020
FIELD BOOK:	
JOB NUMBER:	20KC40008

REVISIONS

NO.	DESCRIPTION	BY	DATE

©COPYRIGHT ANDERSON ENGINEERING, INC. 2012

END BENT 2
RIDGEMONT DR. BRIDGE OVER COUNTY HOUSE BRANCH
SEC. 22 T48N, R13W
CITY OF COLUMBIA, MISSOURI

SHEET NUMBER 15 OF 28

G:\My Drive\20KJ0008 - ridgemont bridge\CADD\Plans\B_End Bent 2

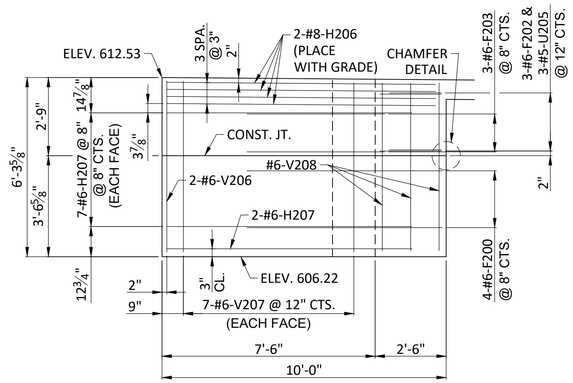

ELEVATION H-H

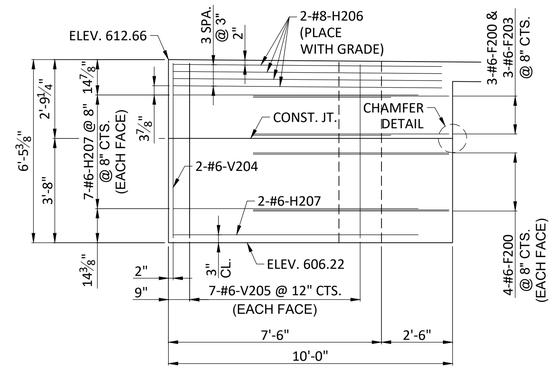

ELEVATION J-J

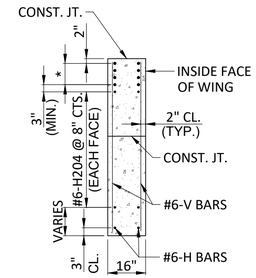

TYPICAL SECTION THRU WING

* #8-H BARS AT 3" CTS. (EACH FACE) (PLACE WITH GRADE)

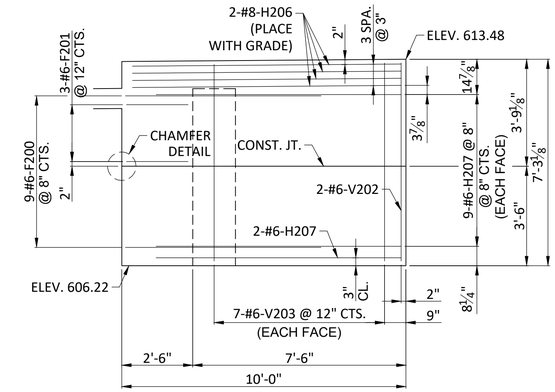

ELEVATION K-K

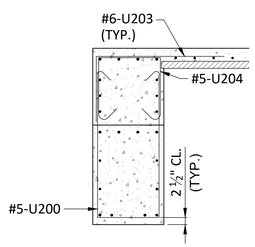

SECTION A-A

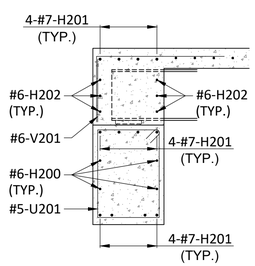

SECTION B-B

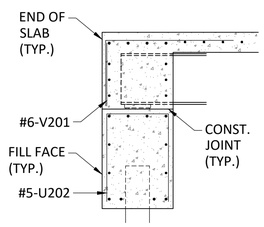

SECTION C-C

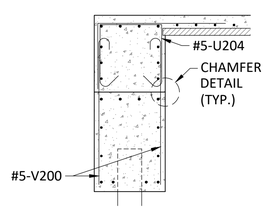

SECTION D-D

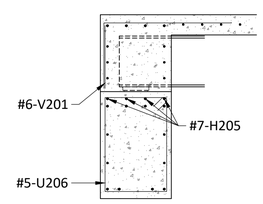

SECTION E-E

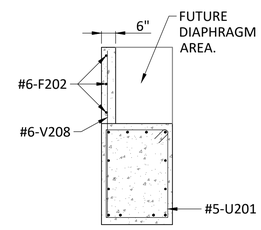

SECTION F-F

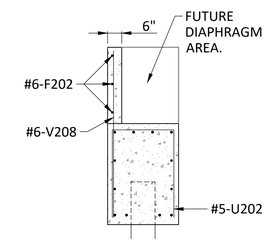

SECTION G-G

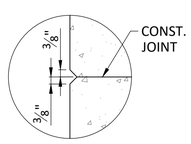

CHAMFER DETAIL

GENERAL NOTES:

WORK THIS SHEET WITH SHEETS NO. 14 & 15.

FOR SECTIONS AND ELEVATIONS SEE SHEET NO. 15

THE #6-F200 BARS SHALL BE BENT IN THE FIELD TO CLEAR GIRDERS.

ALL U BARS AND PAIRS OF V BARS SHALL BE PLACED PARALLEL TO CENTERLINE OF ROADWAY.

ALL CONCRETE IN THE END BENT ABOVE TOP OF BEAM AND BELOW TOP OF SLAB SHALL BE CLASS B-2.

ANDERSON ENGINEERING
EMPLOYEE OWNED
ENGINEERS · SURVEYORS · LABORATORIES · DRILLING

STATE OF MISSOURI
GARY D. STRACK
NUMBER PE-2003027769
PROFESSIONAL ENGINEER
04/04/2022

DRAWING INFO.	
FIELD BY:	
DRAWN BY:	CAW
CHECK BY:	GDS
DATE:	10/29/2020
FIELD BOOK:	
JOB NUMBER:	20KC40008

REVISIONS

NO.	DESCRIPTION	BY	DATE

©COPYRIGHT ANDERSON ENGINEERING, INC. 2012

END BENT 2

RIDGEMONT DR. BRIDGE OVER COUNTY HOUSE BRANCH

SEC. 22 T48N, R13W

CITY OF COLUMBIA, MISSOURI

SHEET NUMBER 16 OF 28

G:\My Drives\Jobs\0008 - ridgemont bridge\CAD\Plans\B_End Bent 2

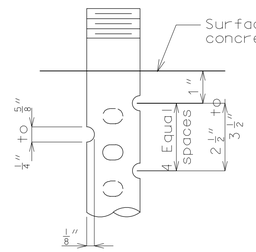

DETAIL FOR 3/4"Ø THRU 2 1/2"Ø ANCHOR BOLTS

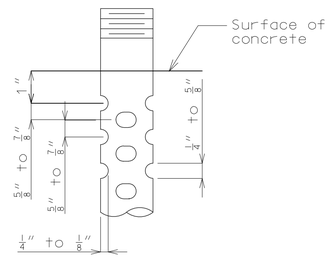

OPTIONAL DETAIL FOR 1 3/8"Ø THRU 2 1/2"Ø ANCHOR BOLTS

SWEDGE ANCHOR BOLT DETAILS

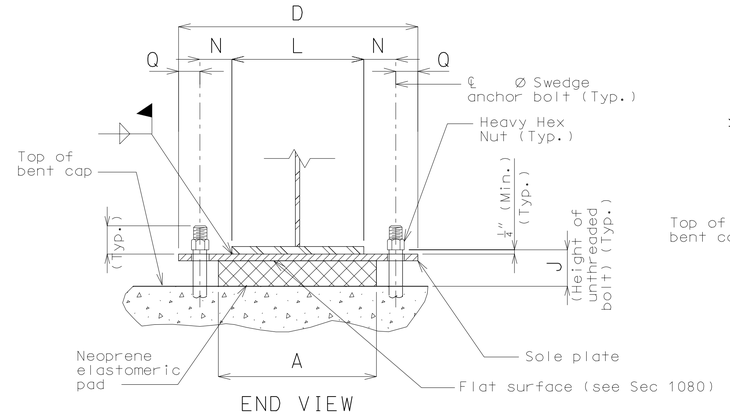

END VIEW

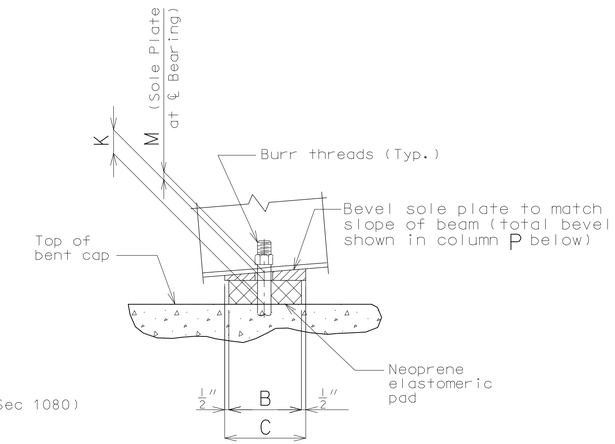

SIDE VIEW

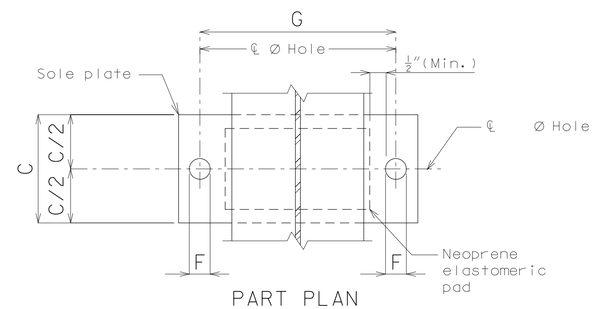

PART PLAN

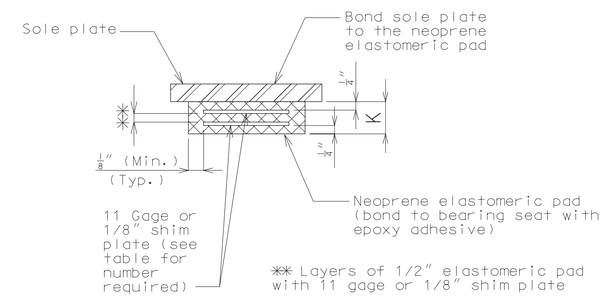

NEOPRENE ELASTOMERIC PAD

FIXED BEARINGS															
BENT NO.	A	B	C	D	F	G	J	K	L	M	N	P	Q	NUMBER OF SHIM PLATES *	NUMBER REQUIRED
1	10"	10"	11"	18"	1 1/8"	13 1/2"	2 1/4"	1/2"	8 3/8"	1 1/2"	2 9/16"	0"	2 1/4"	0	7
2	10"	10"	11"	18"	1 1/8"	13 1/2"	2 1/4"	1/2"	8 3/8"	1 1/2"	2 9/16"	0"	2 1/4"	0	7
														TOTAL BEARINGS	14

* The required shim plate shall be placed between layers of elastomer and molded together to form an integral unit.

GENERAL NOTES:

Anchor bolts shall be 1" Ø ASTM F1554 Grade 55 swedged bolts and shall extend 15" into the concrete with ASTM A563 Grade A Heavy Hex nuts. Actual manufacturer's certified mill test reports (chemical and mechanical) shall be provided. Swedging shall be 1" less than extension into the concrete.

Anchor bolts and heavy hex nuts shall be coated with a minimum of two coats of inorganic zinc primer to provide a total dry film thickness of 4 mils minimum, 6 mils maximum, or galvanized in accordance with Sec 1081.

Neoprene Elastomeric Pads shall be 60 Durometer.

Structural steel for sole plate shall be ASTM A709 Grade 50W and shall be coated with a minimum of two coats of inorganic zinc primer to provide a total dry film thickness of 4 mils minimum, 6 mils maximum. The welds shall have corrosion resistance and weathering characteristics compatible with the base material.

Laminated Neoprene Bearing Pad Assembly shall be in accordance with Sec 716.

LAMINATED NEOPRENE BEARING PAD ASSEMBLY

ANDERSON ENGINEERING
EMPLOYEE OWNED
ENGINEERS · SURVEYORS · LABORATORIES · DRILLING

STATE OF MISSOURI
GARY D. STRACK
NUMBER PE-2004015024
PROFESSIONAL ENGINEER
04/04/2022

DRAWING INFO.	
FIELD BY:	
DRAWN BY:	CAW
CHECK BY:	GDS
DATE:	10/29/2020
FIELD BOOK:	
JOB NUMBER:	20KC40008

REVISIONS			
NO.	DESCRIPTION	BY	DATE

©COPYRIGHT ANDERSON ENGINEERING, INC. 2012

BEARING PAD ASSEMBLY
RIDGEMONT DR. BRIDGE OVER COUNTY HOUSE BRANCH
SEC. 22 T48N, R13W
CITY OF COLUMBIA, MISSOURI

SHEET NUMBER 17 OF 28

G:\My Drives\20KC40008 - Ridgemont bridge\CADD\Sheet18_Bearing Pad Assembly

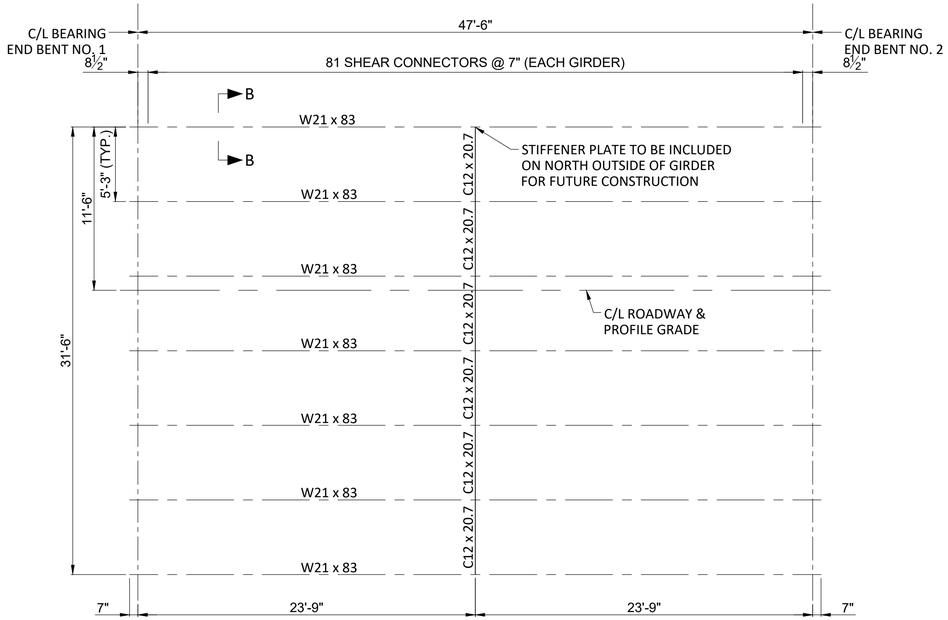

FRAMING PLAN

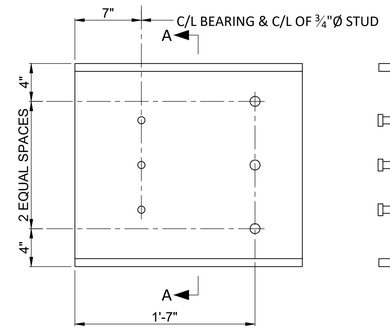

SECTION AT END OF BEAM

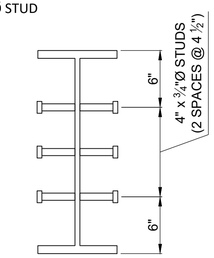

SECTION A-A

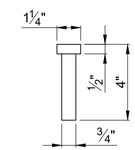

WELDED STUD

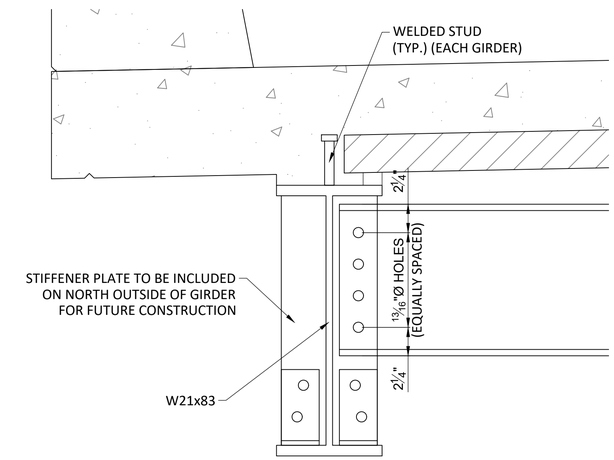

SECTION B-B

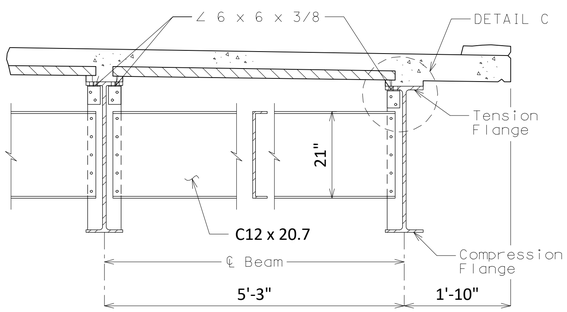

TYPICAL PART SECTION SHOWING
CROSS FRAMES AND
INTERMEDIATE DIAPHRAGMS
TOP FLANGE IN TENSION

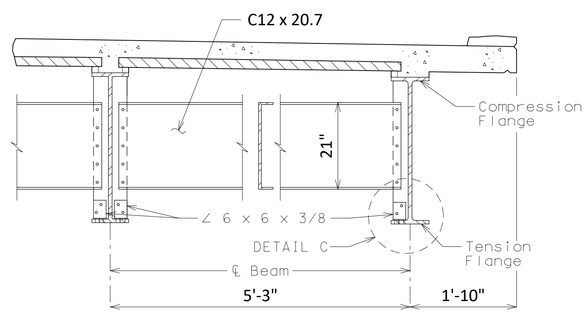

TYPICAL PART SECTION SHOWING
INTERMEDIATE DIAPHRAGMS
BOTTOM FLANGE IN TENSION

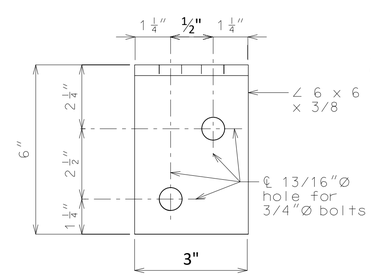

ELEVATION

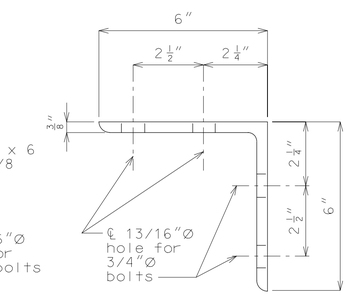

SIDE VIEW

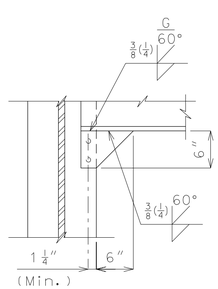

DETAIL B

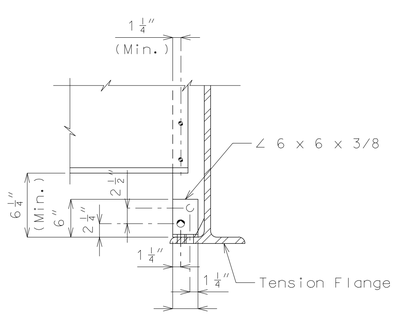

DETAIL C

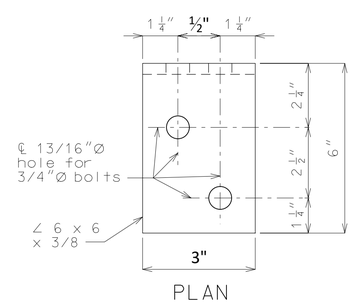

PLAN

DETAIL OF FLANGE CONNECTION ANGLE

NOTE: BOLTS SHALL BE ¾"Ø ASTM F3125 GRADE A325 TYPE 3 THAT CONNECT THE 6 x 6 x ⅜ ANGLE TO THE TOP FLANGE AND PLACED SO THE NUT IS ON THE INSIDE OF FLANGE (TOWARD THE WEB).

STEEL DIAPHRAGMS

ANDERSON ENGINEERING
EMPLOYEE OWNED
ENGINEERS · SURVEYORS · LABORATORIES · DRILLING

STATE OF MISSOURI
GARY D. STRACK
NUMBER
PE-2004014262
04/04/2022
PROFESSIONAL ENGINEER

DRAWING INFO.	
FIELD BY:	
DRAWN BY:	CAW
CHECK BY:	GDS
DATE:	10/29/2020
FIELD BOOK:	
JOB NUMBER:	20KC40008

REVISIONS		
NO.	DESCRIPTION	BY

©COPYRIGHT ANDERSON ENGINEERING, INC. 2012

FRAMING PLAN
RIDGEMONT DR. BRIDGE OVER
COUNTY HOUSE BRANCH
SEC. 22 T48N, R13W
CITY OF COLUMBIA, MISSOURI

SHEET NUMBER
18
OF 28

G:\My Drive\Jobs\20008 ridgemont bridge\CAD\Sheets_Framing Plan

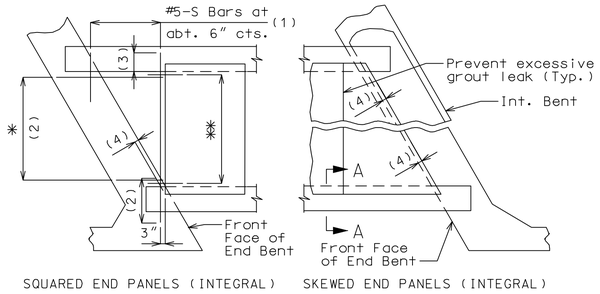

SQUARED END PANELS (INTEGRAL) SKEWED END PANELS (INTEGRAL)

PLAN SHOWING PANELS PLACEMENT

✱ #5-S Bars at abt. 9" cts. (1)
✱✱ #3-P1 at 12" cts. (End panels only)

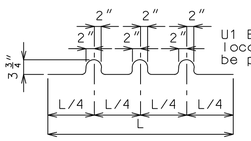

U1 Bars may be oriented at right angles to location and spacing shown. U1 Bars shall be placed between P1 bars.

BENDING DIAGRAM FOR U1 BAR

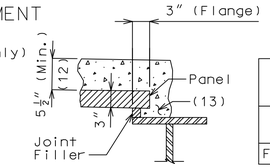

SECTION A-A

Joint Filler Dimensions			
Loc.	Width (W)	Height (H)	
		Min.	Max.
Flange	1 1/2"	1"	2"

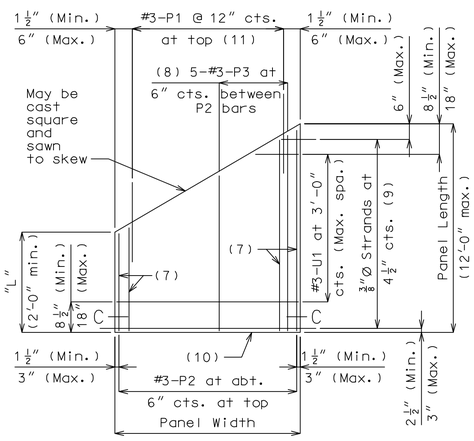

PLAN OF OPTIONAL SKEWED END PANEL

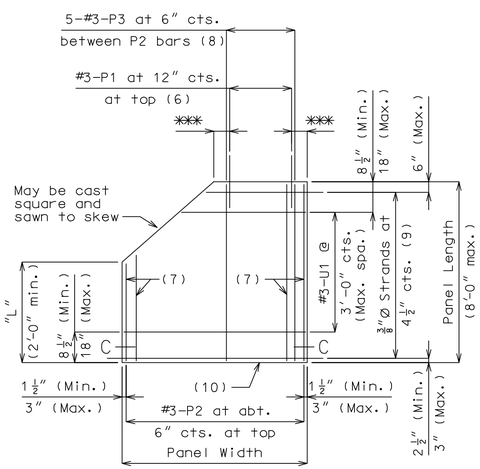

PLAN OF OPTIONAL TRUNCATED END PANEL

✱✱✱ 3" (Min.), 6" (Max.)

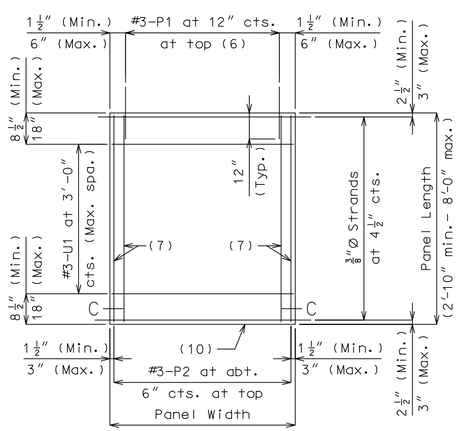

PLAN OF SQUARED PANEL

DETAILS OF PRESTRESSED PANELS

Reference Notes:

Plan of Panels Placement:

(1) S-bars shown are bottom steel in slab between panels and used with squared and truncated end panels only.

(2) Extend S-bars 18 inches beyond the front face of end bents and int. bents for squared and truncated end panels only.

(3) Extend S-bars 9 inches beyond edge of girder (Typ.).

(4) End panels shall be dimensioned 1/2" min. to 1 1/2" max. from the inside face of diaphragm.

(5) For truncated end panels, use a min. of #5-S bars at 6" crossings in openings, or min. 4x4-W7xW7.

Plans of Panels:

(6) For end panels only, P1 bars shall be 2'-0" in length and embedded 12". P1 bars will not be required for panels at squared integral end bents.

(7) #3-P2 bars near edge of panel at bottom (under strands).

(8) Use #3-P3 bars if panel is skewed 45° or greater.

(9) Any strand 2'-0" or shorter shall have a #4 reinforcing bar on each side of it, centered between strands. Strands 2'-0" or shorter may then be debonded at the fabricator's option.

(10) Optional 1/2" x 45° Chamfer one or both sides at bottom.

(11) P1 bars not required for integral end bents.

Section A-A:

(12) Adjustment in the slab thickness, joint filler, or grade will be necessary if the girder camber after erection differs from plan camber by more than the % of dead load deflection due to the weight of structural steel. No payment will be made for additional labor or materials for the adjustment.

(13) Contractor shall ensure proper consolidation under and between panels.

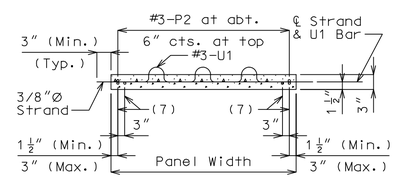

SECTION C-C

General Notes:

Prestressed Panels:

Concrete for prestressed panels shall be Class A-1 with f'c = 6,000 psi, f'ci = 4,000 psi.

The top surface of all panels shall receive a scored finish with a depth of scoring of 1/8" perpendicular to the prestressing strands in the panels.

Prestressing tendons shall be high-tensile strength uncoated seven-wire low-relaxation strands for prestressed concrete in accordance with AASHTO M 203 Grade 270, with nominal diameter of strand = 3/8" and nominal area = 0.085 sq. in. and minimum ultimate strength = 22.95 kips (270 ksi). Larger strands may be used with the same spacing and initial tension.

Initial prestressing force = 17.2 kips/strand.

The method and sequence of releasing the strands shall be shown on the shop drawings.

Suitable anchorage devices for lifting panels may be cast in panels, provided the devices are shown on the shop drawings and approved by the engineer. Panel lengths shall be determined by the contractor and shown on the shop drawings.

When squared end panels are used at skewed bents, the skewed portion shall be cast full depth. No separate payment will be made for additional concrete and reinforcing required.

Support from diaphragm forms is required under the optional skewed end until cast-in-place concrete has reached 3,000 psi compressive strength.

Prestressed panels shall be brought to saturated surface-dry (SSD) condition just prior to the deck pour. There shall be no free standing water on the panels or in the area to be cast.

The prestressed panel quantities are not included in the table of estimated quantities for slab.

Reinforcing Steel:

All dimensions are out to out.

Hooks and bends shall be in accordance with the CRSI Manual of Standard Practice for Detailing Reinforced Concrete Structures, Stirrup and Tie Dimensions.

Minimum clearance to reinforcing steel shall be 1 1/2", unless otherwise shown.

If U1 bars interfere with placement of slab steel, U1 loops may be bent over, as necessary, to clear slab steel.

Deformed welded wire reinforcement (WWR) providing a minimum area of reinforcing perpendicular to strands of 0.22 sq in./ft, with spacing parallel to strands sufficient to ensure proper handling, may be used in lieu of the #3-P2 bars shown. Wire diameter shall not be larger than 0.375 inch. The above alternative reinforcement criteria may be used in lieu of the #3-P3 bars, when required, and placed over a width not less than 2 feet.

The following reinforcing steel shall be tied securely to the strands with the following maximum spacing in each direction:
#3-P2 bars at 16 inches.
WWR at 24 inches.

The #3-U1 bars shall be tied securely to #3-P2 bars, to WWR or to strands (when placed between P1 bars) at about 3-foot centers.

Minimum reinforcement steel length shall be 2'-0".

All reinforcement other than prestressing strands shall be epoxy coated.

Precast panels may be in contact with stirrup reinforcing in diaphragms.

S-bars are not listed in the bill of reinforcing.

Cost of S-bars will be considered completely covered by the contract unit price for the Slab.

Joint Filler:

Joint filler shall be preformed fiber expansion joint material in accordance with Sec 1057 or expanded or extruded polystyrene bedding material in accordance with Sec 1073.

The thickness of the joint filler shall be adjusted to achieve the slab haunching dimension found on Sheet No. 20. These adjustments shall be within the limits noted in the table of Joint Filler Dimensions.

Thicker material shall be used on one or both sides of the girder to reduce cast-in-place concrete thickness to within tolerances.

The same thickness of material shall be used under any one edge of any panel except at splices, and the maximum change in thickness between adjacent panels shall be 1/4 inch to correct for variations from Girder Camber Diagram. The polystyrene bedding material may be cut to match haunch height above top of flange.

Joint filler shall be glued to the girder. When thickness exceeds 1 1/2 inches, the joint filler shall be glued top and bottom. The glue used shall be the type recommended by the joint filler manufacturer.

Edges of panels shall be uniformly seated on the joint filler before slab reinforcement is placed.

ANDERSON ENGINEERING
EMPLOYEE OWNED
ENGINEERS · SURVEYORS · LABORATORIES · DRILLING

STATE OF MISSOURI
GARY D. STRACK
NUMBER 2004042022
PROFESSIONAL ENGINEER

REVISIONS			
NO.	DESCRIPTION	BY	DATE

DRAWING INFO.	
FIELD BY:	
DRAWN BY:	CAW
CHECK BY:	GDS
DATE:	10/29/2020
FIELD BOOK:	
JOB NUMBER:	20KC40008

©COPYRIGHT ANDERSON ENGINEERING, INC. 2012

DETAILS OF PRESTRESSED PANELS
RIDGEMONT DR. BRIDGE OVER
COUNTY HOUSE BRANCH
SEC. 22 T48N, R13W
CITY OF COLUMBIA, MISSOURI

SHEET NUMBER 19 OF 28

G:\My Drives\Jobs\0008 - ridgemont bridge\CADD\Parts\B_Details of Prestressed Panels

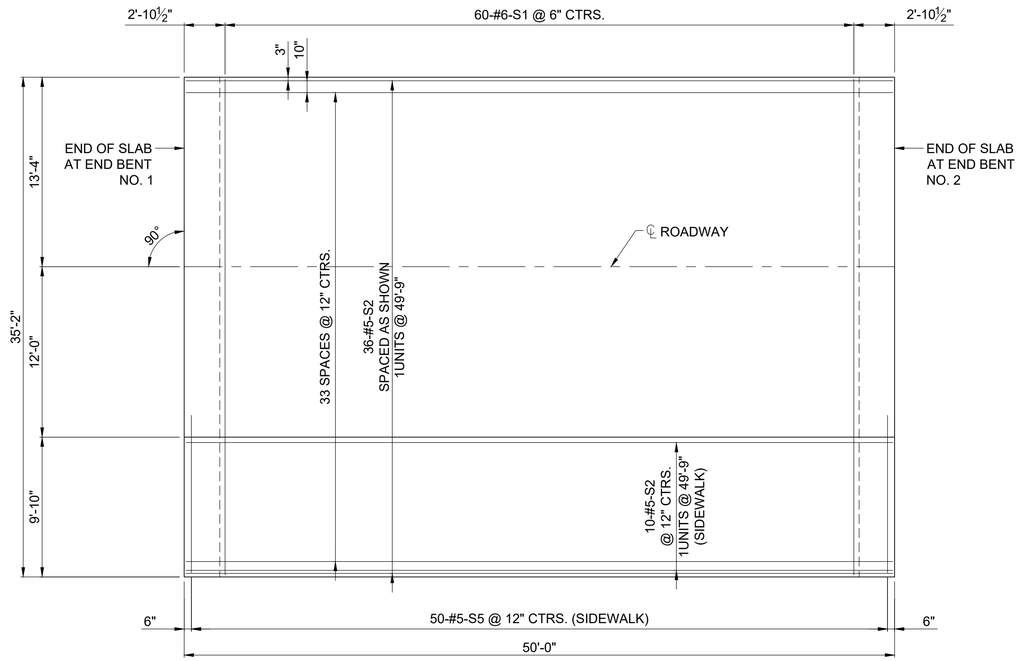

PLAN OF SLAB SHOWING TOP REINFORCEMENT

3/16" = 1'-0"

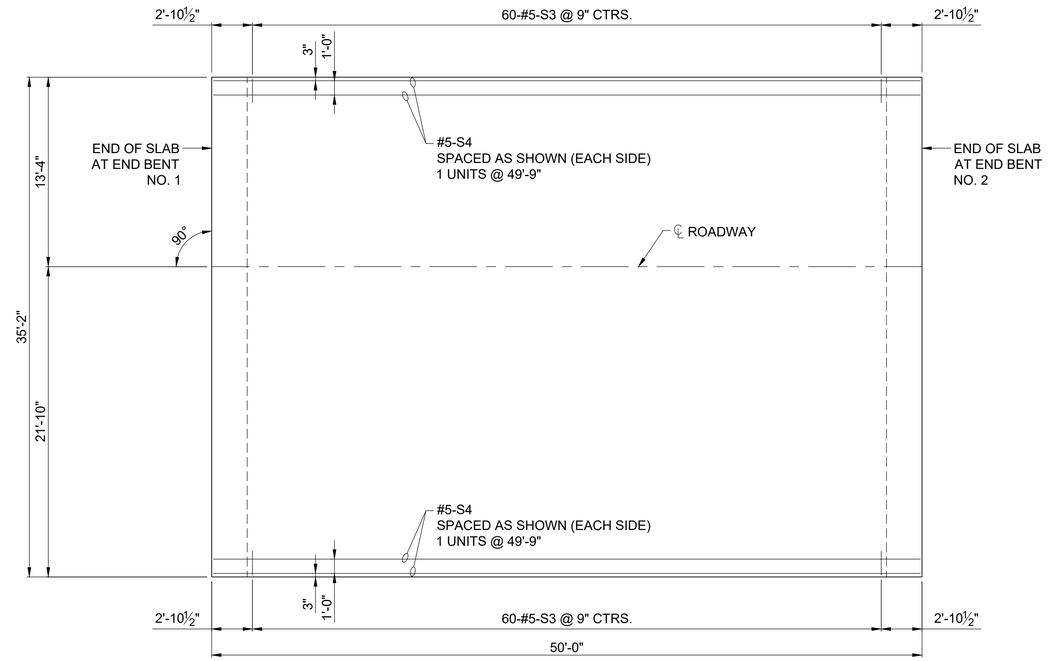

PLAN OF SLAB SHOWING BOTTOM REINFORCEMENT

3/16" = 1'-0"

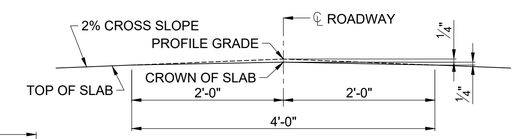

PARABOLIC CROWN DETAIL

N.T.S.

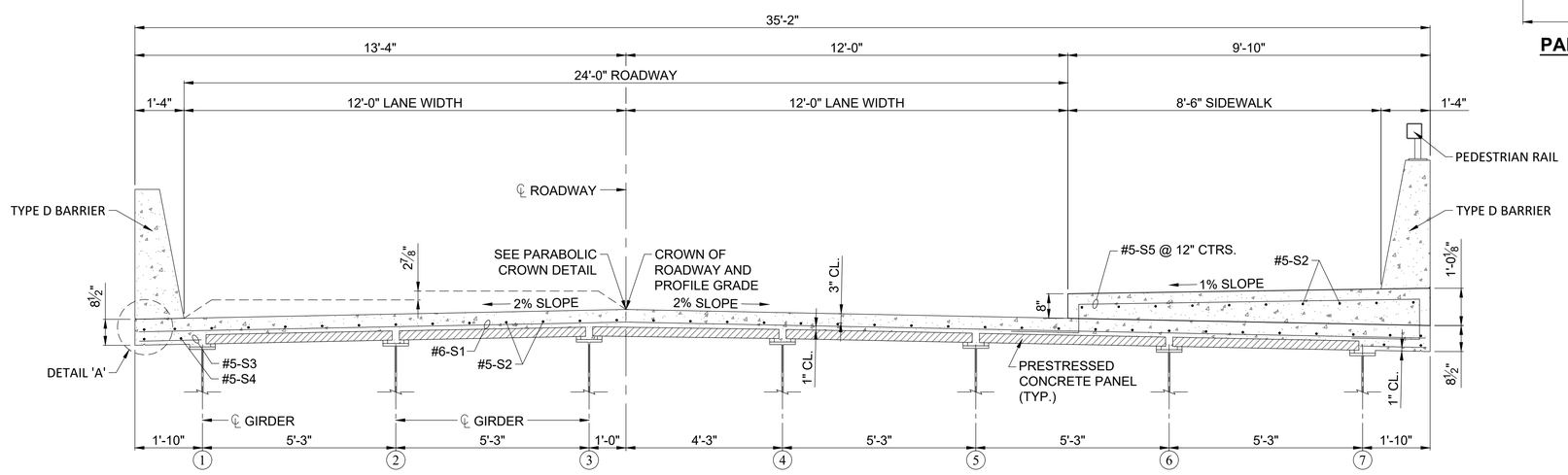

TYPICAL SECTION - BRIDGE

½" = 1'-0"

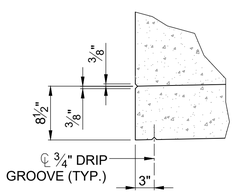

DETAIL 'A'

N.T.S.

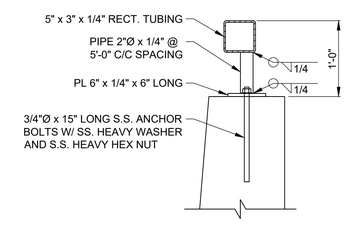

PEDESTRIAN RAIL

ANDERSON ENGINEERING
EMPLOYEE OWNED
ENGINEERS - SURVEYORS - LABORATORIES - DRILLING

STATE OF MISSOURI
GARY D. STRACK
NUMBER PE-2003027766
04/04/2022
PROFESSIONAL ENGINEER

REVISIONS			
NO.	DESCRIPTION	BY	DATE

DRAWING INFO.	
FIELD BY:	
DRAWN BY:	CAW
CHECK BY:	GDS
DATE:	10/29/2020
FIELD BOOK:	
JOB NUMBER:	20/KC40008

©COPYRIGHT ANDERSON ENGINEERING, INC. 2012

SLAB - PLAN & DETAILS
RIDGEMONT DR. BRIDGE OVER COUNTY HOUSE BRANCH
SEC. 22 T48N, R13W
CITY OF COLUMBIA, MISSOURI

SHEET NUMBER 20 OF 28

G:\My Drive\20\KC40008 - ridgemont bridge\CADD\Plans\B_Slab - Plan & Details

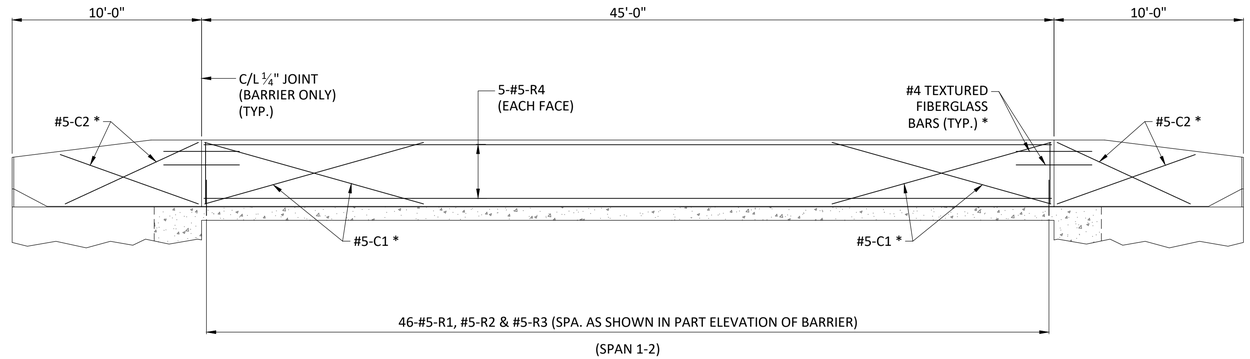

ELEVATION OF BARRIER

(LEFT BARRIER SHOWN, RIGHT BARRIER SIMILAR)
LONGITUDINAL DIMENSIONS ARE HORIZONTAL.

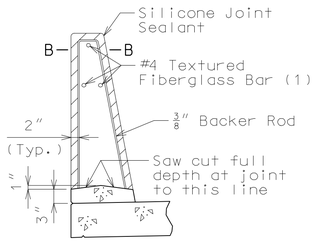

SECTION THRU
SAW CUT JOINT

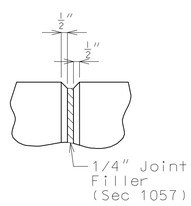

PART ELEVATION
AT FORMED JOINT

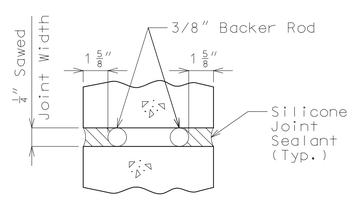

SECTION B-B

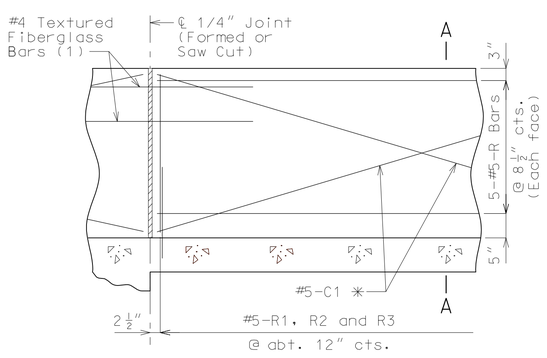

PART ELEVATION OF BARRIER

(1) Four feet long, centered on joint, slip-formed option only

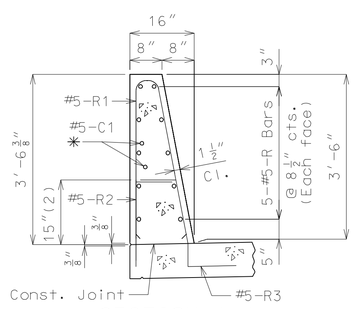

SECTION A-A

Use a minimum lap of 3'-1" for #5 horizontal barrier bars.

The cross-sectional area above the slab is 3.52 square feet.

(2) To top of bar

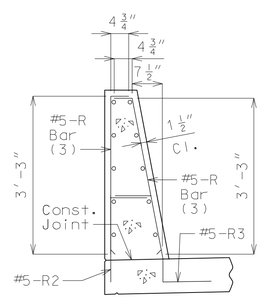

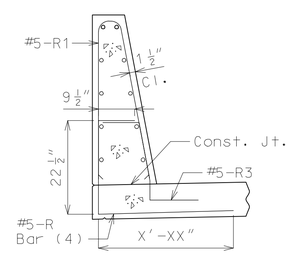

R-BAR PERMISSIBLE ALTERNATE SHAPE

(3) The R1 bar may be separated into two bars as shown, at the contractor's option, only when slip forming is not used. (All dimensions are out to out.)

(4) The R2 bar and #5 bottom transverse slab bar in cantilever (prestressed panels only) combination may be furnished as one bar as shown, at the contractor's option.

General Notes:

* Slip-formed option only.

Conventional forming or slip forming may be used. Saw cut joints may be used with conventional forming.

Top of barrier shall be built parallel to grade and barrier joints (except at end bents) normal to grade.

All exposed edges of barrier shall have either a 1/2-inch radius or a 3/8-inch bevel, unless otherwise noted.

Payment for all concrete and reinforcement, complete in place, will be considered completely covered by the contract unit price for Type D Barrier per linear foot.

Concrete in barrier shall be Class B-1.

Measurement of barrier is to the nearest linear foot for each structure, measured along the outside top of slab from end of wing to end of wing.

Concrete traffic barrier delineators shall be placed on top of the barrier as shown on Missouri Standard Plan 617.10 and in accordance with Sec 617. Delineators on bridges with two-lane, two-way traffic shall have retroreflective sheeting on both sides. Concrete traffic barrier delineators will be considered completely covered by the contract unit price for Type D Barrier.

Joint sealant and backer rods shall be in accordance with Sec 717 for silicone joint sealant for saw cut and formed joints.

For slip-formed option, both sides of barrier shall have a vertically broomed finish and the top shall have a transversely broomed finish.

TYPE D BARRIER

ANDERSON ENGINEERING
EMPLOYEE OWNED
ENGINEERS · SURVEYORS · LABORATORIES · DRILLING

STATE OF MISSOURI
GARY D. STRACK
NUMBER PE-2003027526
PROFESSIONAL ENGINEER
04/04/2022

DRAWING INFO.
FIELD BY:
DRAWN BY: CAW
CHECK BY: GDS
DATE: 10/29/2020
FIELD BOOK:
JOB NUMBER: 29KC40008

NO.	REVISIONS DESCRIPTION	BY	DATE

©COPYRIGHT ANDERSON ENGINEERING, INC. 2012

TYPE D BARRIER
RIDGEMONT DR. BRIDGE OVER
COUNTY HOUSE BRANCH
SEC. 22 T48N, R13W
CITY OF COLUMBIA, MISSOURI

SHEET NUMBER
21
OF 28

G:\My Drive\29kc40008 - ridgemont bridge\CADD\Parts\B_Type D Barrier

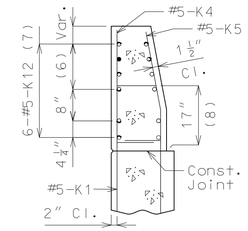

SECTION A-A

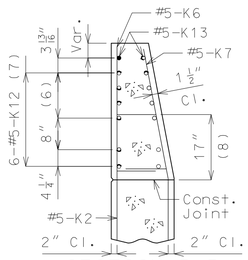

SECTION B-B

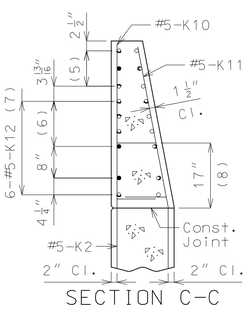

SECTION C-C

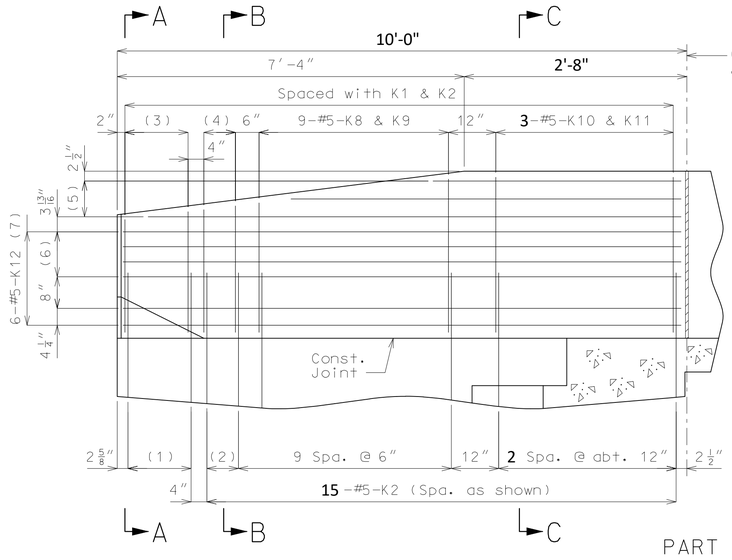

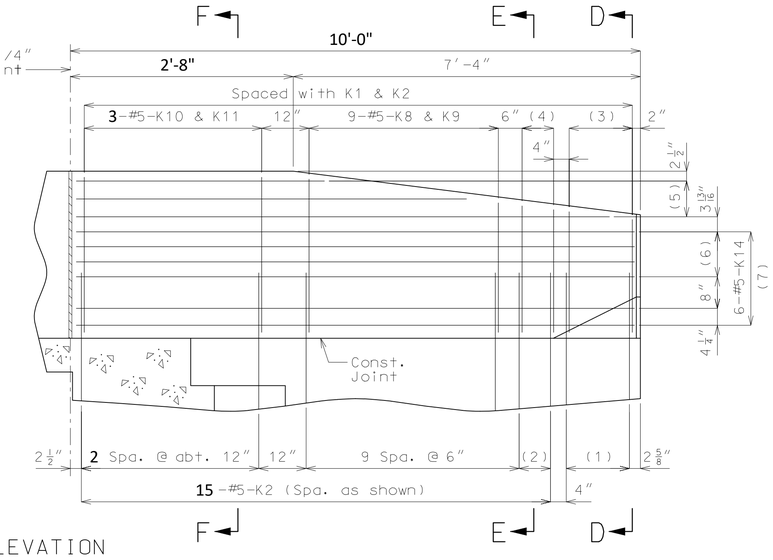

PART ELEVATION

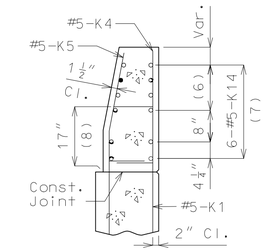

SECTION D-D

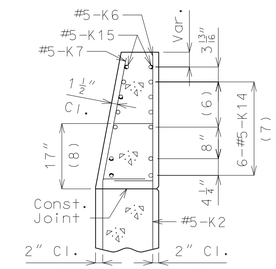

SECTION E-E

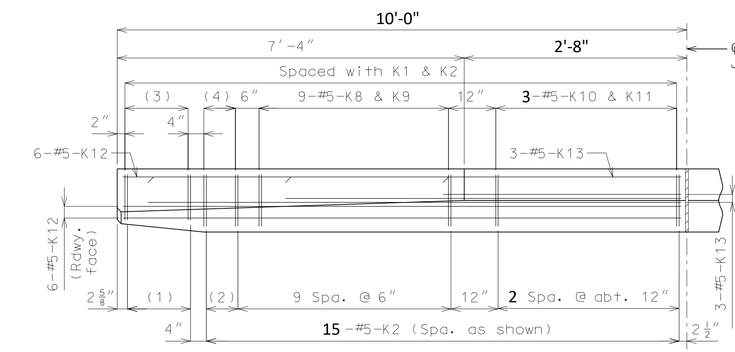

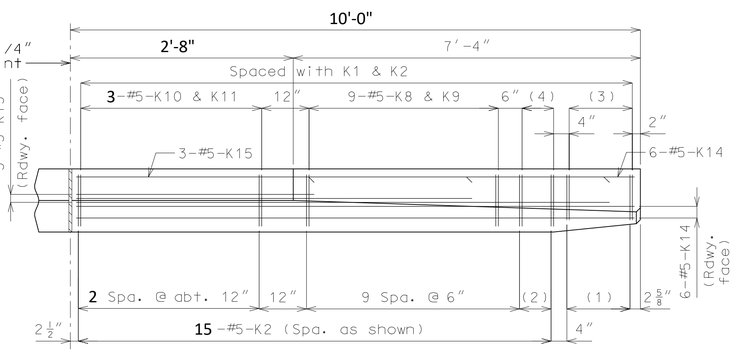

PART PLAN

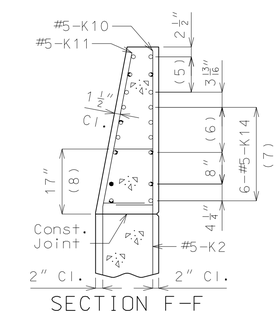

SECTION F-F

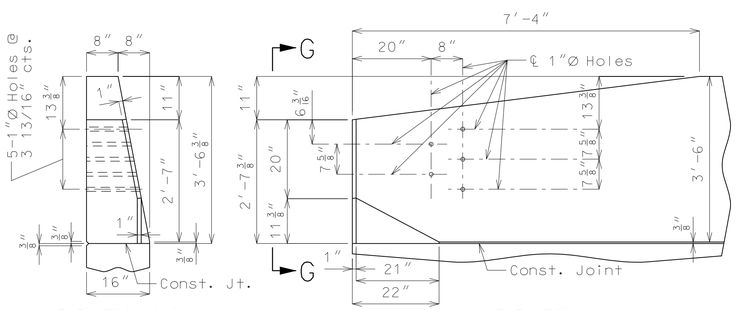

ELEVATION G-G

ELEVATION

(1) 5-#5-K1 @ 4" cts.

(2) 2 spaces @ 4"

(3) 5-#5-K4 & K5

(4) 3-#5-K6 & K7

(5) 3-#5-K13 or K15 @ 4 1/2" cts., each face

(6) 3 spaces @ 3 13/16"

(7) Spaced as shown, each face

(8) To top of bar

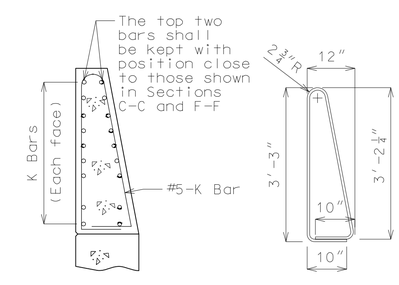

K10-K11 BAR PERMISSIBLE ALTERNATE SHAPE

(Other K bars not shown for clarity)

The K10-K11 bar combination may be furnished as one bar as shown, at the contractor's option.

All dimensions are out to out.

✳ Transition to zero at Type A curb for gutter lines to match.

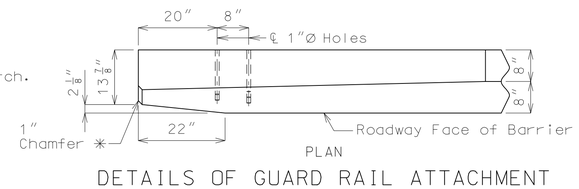

PLAN

DETAILS OF GUARD RAIL ATTACHMENT

General Notes:

Concrete traffic barrier delineators shall be placed on top of the barrier as shown on Missouri Standard Plan 617.10 and in accordance with Sec 617. Delineators on bridges with two-lane, two-way traffic shall have retroreflective sheeting on both sides. Concrete traffic barrier delineators will be considered completely covered by the contract unit price for Type D Barrier.

Reinforcing Steel:

Minimum clearance to reinforcing steel shall be 1 1/2" except as shown for bars embedded into end bent.

TYPE D BARRIER AT END BENTS

(Left barrier shown, right barrier similar)

ANDERSON ENGINEERING
EMPLOYEE OWNED
ENGINEERS · SURVEYORS · LABORATORIES · DRILLING

STATE OF MISSOURI
GARY D. STRACK
NUMBER 2004042022
PROFESSIONAL ENGINEER

DRAWING INFO.	
FIELD BY:	
DRAWN BY:	CAW
CHECK BY:	GDS
DATE:	10/29/2020
FIELD BOOK:	
JOB NUMBER:	20KC40008

REVISIONS		
NO.	DESCRIPTION	BY	DATE

©COPYRIGHT ANDERSON ENGINEERING, INC. 2012

TYPE D BARRIER AT END BENTS
RIDGEMONT DR. BRIDGE OVER
COUNTY HOUSE BRANCH
SEC. 22 T48N, R13W
CITY OF COLUMBIA, MISSOURI

SHEET NUMBER 22 OF 28

G:\My Drives\Projects\20-ridgemont bridge\CADD\Plans\B_Type D Barrier at End Bents

BILL OF REINFORCING STEEL

SUPERSTRUCTURE

NO. REQ'D.	SIZE	MARK	LOCATION	EPOXY (E)	SHAPE NO.	STIRRUP (S)	SUBSTR. (X)	VARIES (V)	NO. EACH	B FT.	B IN.	C FT.	C IN.	D FT.	D IN.	E FT.	E IN.	F FT.	F IN.	H FT.	H IN.	K FT.	K IN.	NOMINAL LENGTH FT.	NOMINAL LENGTH IN.	ACTUAL LENGTH FT.	ACTUAL LENGTH IN.	WEIGHT LBS.
			END BENT 1																									
24	6	F100	Wing	E	23	S				1	2.000	4	10.875	2	3.000	1	7.125	1	7.125	0	9.875	0	9.875	8	4	8	3	297
3	6	F101	Diaphragm	E	19	S				4	9.875	2	2.000											7	0	6	11	31
3	6	F102	Diaphragm	E	19	S				8	2.500	2	2.000											10	5	10	4	47
6	6	F103	Diaphragm	E	15	S				2	9.000	3	8.125	2	3.000	1	7.125	1	7.000	1	11.250	1	11.375	8	8	8	7	77
4	6	H100	Beam	E	20					41	8.000													41	8	41	8	250
8	7	H101	Beam	E	20					41	8.000													41	8	41	8	681
6	6	H102	Diaphragm	E	20					34	10.125													34	10	34	10	314
24	8	H103	Diaphragm	E	20					9	5.500													9	6	9	6	609
52	6	H104	Diaphragm	E	20					8	7.500													8	8	8	8	677
4	7	H105	Diaphragm	E	20					13	6.000													13	6	13	6	110
4	8	H106	Wing	E	20					34	10.125													34	10	34	10	372
21	5	U100	Beam	E	31	S				5	1.625	2	2.000	5	1.625									13	4	13	2	288
16	5	U101	Beam	E	13	S				2	2.000	3	1.000	2	2.000	3	1.000							11	5	11	1	185
6	5	U102	Beam	E	10	S						3	1.000	2	2.000									8	4	8	2	51
43	6	U103	Diaphragm	E	19	S				2	3.625	4	6.000											6	10	6	8	431
26	6	U104	Diaphragm	E	31	S				2	2.125	2	2.000	2	2.125									7	5	7	3	283
3	5	U105	Diaphragm	E	10	S						1	10.000	1	0.000									4	8	4	6	14
9	5	U106	Beam	E	13	S				2	2.000	3	3.625	2	2.000	3	3.625							11	10	11	6	108
10	5	V100	Beam	E	20					5	2.125													5	2	5	2	54
14	6	V101	Diaphragm	E	20					2	2.500													2	3	2	3	47
2	6	V102	Wing	E	20					6	10.000													6	10	6	10	21
14	6	V103	Wing	E	20			V	2	6	10.000													6	10			144
			INCREMENT =							6	10.625													6	11			
			-0.125																									
2	6	V104	Wing	E	20					6	0.125													6	0	6	0	18
14	6	V105	Wing	E	20			V	2	6	0.250													6	0			127
			INCREMENT =							6	0.750													6	1			
			-0.125																									
2	6	V106	Wing	E	20					5	10.375													5	10	5	10	18
14	6	V107	Wing	E	20			V	2	5	10.500													5	11			124
			INCREMENT =							5	11.125													5	11			
			-0.125																									
12	6	V108	Wing	E	20					5	10.875													5	11	5	11	107
			END BENT 2																									
24	6	F100	Wing	E	23	S				1	2.000	4	10.875	2	3.000	1	7.125	1	7.125	0	9.875	0	9.875	8	4	8	3	297
3	6	F101	Diaphragm	E	19	S				4	9.875	2	2.000											7	0	6	11	31
3	6	F102	Diaphragm	E	19	S				8	2.500	2	2.000											10	5	10	4	47
6	6	F103	Diaphragm	E	15	S				2	9.000	3	8.125	2	3.000	1	7.125	1	7.000	1	11.250	1	11.375	8	8	8	7	77
4	6	H100	Beam	E	20					41	8.000													41	8	41	8	250
8	7	H101	Beam	E	20					41	8.000													41	8	41	8	681
6	6	H102	Diaphragm	E	20					34	10.125													34	10	34	10	314
24	8	H103	Diaphragm	E	20					9	5.500													9	6	9	6	609
52	6	H104	Diaphragm	E	20					8	7.500													8	8	8	8	677
4	7	H105	Diaphragm	E	20					13	6.000													13	6	13	6	110
4	8	H106	Wing	E	20					34	10.125													34	10	34	10	372
21	5	U100	Beam	E	31	S				5	1.625	2	2.000	5	1.625									13	4	13	2	288
16	5	U101	Beam	E	13	S				2	2.000	3	1.000	2	2.000	3	1.000							11	5	11	1	185
6	5	U102	Beam	E	10	S						3	1.000	2	2.000									8	4	8	2	51
43	6	U103	Diaphragm	E	19	S				2	3.625	4	6.000											6	10	6	8	431
26	6	U104	Diaphragm	E	31	S				2	2.125	2	2.000	2	2.125									7	5	7	3	283
3	5	U105	Diaphragm	E	10	S						1	10.000	1	0.000									4	8	4	6	14
9	5	U106	Beam	E	13	S				2	2.000	3	3.625	2	2.000	3	3.625							11	10	11	6	108
10	5	V100	Beam	E	20					5	2.125													5	2	5	2	54
14	6	V101	Diaphragm	E	20					2	2.500													2	3	2	3	47
2	6	V102	Wing	E	20					6	10.000													6	10	6	10	21
14	6	V103	Wing	E	20			V	2	6	10.000													6	10			144
			INCREMENT =							6	10.625													6	11			
			-0.125																									
2	6	V104	Wing	E	20					6	0.125													6	0	6	0	18
14	6	V105	Wing	E	20			V	2	6	0.250													6	0			127
			INCREMENT =							6	0.750													6	1			
			-0.125																									
2	6	V106	Wing	E	20					5	10.375													5	10	5	10	18
14	6	V107	Wing	E	20			V	2	5	10.500													5	11			124
			INCREMENT =							5	11.125													5	11			
			-0.125																									
12	6	V108	Wing	E	20					5	10.875													5	11	5	11	107
			SLAB																									
60	6	S1	Slab	E	20					34	11.000													34	11	34	11	3,147
46	5	S2	Slab	E	20					49	9.000													49	9	49	9	2,387
120	5	S3	Slab	E	20					1	8.125													1	8	1	8	209
4	5	S4	Slab	E	20					49	9.000													49	9	49	9	208
50	5	S5	Slab	E	11					1	10.000	1	0.625	9	3.000		8.750							14	8	14	3	743

BILL OF REINFORCING STEEL

NO. REQ'D.	SIZE	MARK	LOCATION	EPOXY (E)	SHAPE NO.	STIRRUP (S)	SUBSTR. (X)	VARIES (V)	NO. EACH	B FT.	B IN.	C FT.	C IN.	D FT.	D IN.	E FT.	E IN.	F FT.	F IN.	H FT.	H IN.	K FT.	K IN.	NOMINAL LENGTH FT.	NOMINAL LENGTH IN.	ACTUAL LENGTH FT.	ACTUAL LENGTH IN.	WEIGHT LBS.
			BARRIER CURB																									
20	5	K1	Bar. Curb	E	27	S				3	8.000		9.250		5.250	3	2.875				5.125		1.000	8	1	7	11	165
60	5	K2	Bar. Curb	E	27	S				3	8.000		9.250	1	2.500	2	5.750			1	2.250		2.750	8	2	8	0	501
20	5	K4	Bar. Curb	E	19	S		V	4	2	6.250		10.000											3	4	3	3	66
										2	4.250		10.000											3	2	3	1	
			INCREMENT =								0.500																	
20	5	K5	Bar. Curb	E	14	S		V	4		8.375		9.625	1	8.500						4.500	1	8.000	3	3	3	2	64
											8.375		9.625	1	6.500						4.000	1	6.000	3	1	3	0	
			INCREMENT =												0.500						0.125		0.500					
12	5	K6	Bar. Curb	E	19	S		V	4	2	7.750		10.000											3	6	3	5	42
										2	6.750		10.000											3	5	3	4	
			INCREMENT =								0.500																	
12	5	K7	Bar. Curb	E	21	S		V	4	2	7.750		10.000							2	7.125		6.500	3	6	3	5	42
										2	6.750		10.000							2	6.125		6.250	3	5	3	4	
			INCREMENT =								0.500										0.500		0.125					
36	5	K8	Bar. Curb	E	19	S		V	4	3	2.500		10.000											4	1	4	0	141
										2	8.500		10.000											3	7	3	6	
			INCREMENT =								0.750																	
36	5	K9	Bar. Curb	E	21	S		V	4	3	2.625		10.000							3	1.875		7.750	4	1	4	0	138
										2	6.750		10.000							2	6.125		6.250	3	5	3	4	
			INCREMENT =								1.000										1.000		0.250					
12	5	K10	Bar. Curb	E	19	S				3	3.000		10.000											4	1	4	0	50
12	5	K11	Bar. Curb	E	21	S				3	3.125		10.000							3	2.375		7.875	4	1	4	0	50
24	5	K12	Bar. Curb	E	20					9	7.625													9	8	9	8	242
12	5	K13	Bar. Curb	E	20			V	4	8	10.625													8	11			74
			INCREMENT =							2	10.625													2	11			
			36																									
24	5	K14	Bar. Curb	E	20					9	7.625													9	8	9	8	242
12	5	K15	Bar. Curb	E	20			V	4	8	10.625													8	11			74
			INCREMENT =							2	10.625													2	11			
			36																									
92	5	R1	Bar. Curb	E	26					3	3.000		5.125	3	1.625					3	3.000		7.000	7	1	6	11	664
92	5	R2	Bar. Curb	E	19	S				1	8.250		9.625											2	6	2	5	232
92	5	R3	Bar. Curb	E	27	S							9.625	1	3.250		5.250		12.000		15.000		2.875	3	6	3	4	320
20	5	R4	Bar. Curb	E	20					44	9.000													44	9	44	9	933
			SLIP FORM BARRIER CURB																									
8	5	C1	Slip Form	E	20					12	0.000													12	0	12	0	100
8	5	C2	Slip Form	E	20					7	9.000													7	9	7	9	65

TOTALS

5		E	9,152
6		E	9,174
7		E	1,582
8		E	1,962
	TOTAL	E	21,869
SLAB ON GIRDER			
5		E	4,947
6		E	9,174
7		E	1,582
8		E	1,962
	TOTAL	E	17,665
SAFETY BARRIER CURB			
5		E	4,040
SLIP FORM OPTION			
5		E	165

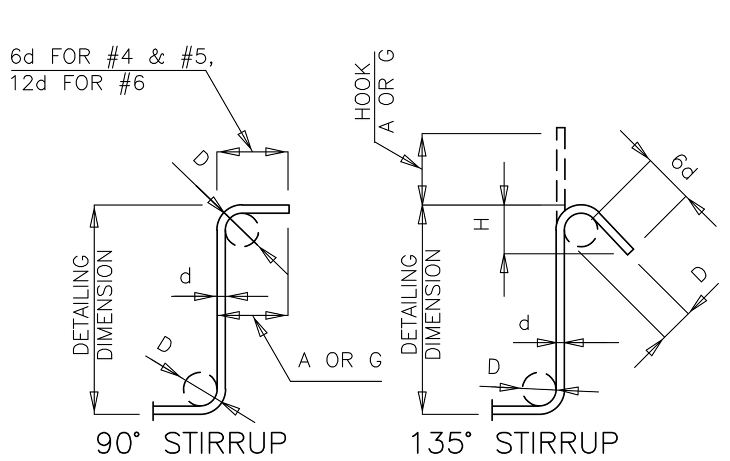

STIRRUP HOOK DIMENSIONS				
GRADES 40 – 50 – 60 KSI				
BAR SIZE	D (IN.)	90° HOOK: HOOK A OR G	135° HOOK: HOOK A OR G	135° HOOK: APPROX. H
#4	2"	4-1/2"	4-1/2"	3"
#5	2-1/2"	6"	5-1/2"	3-3/4"
#6	4-1/2"	12"	8"	4-1/2"

NOTE: UNLESS OTHERWISE NOTED DIAMETER "D" IS THE SAME FOR ALL BENDS AND HOOKS ON A BAR.

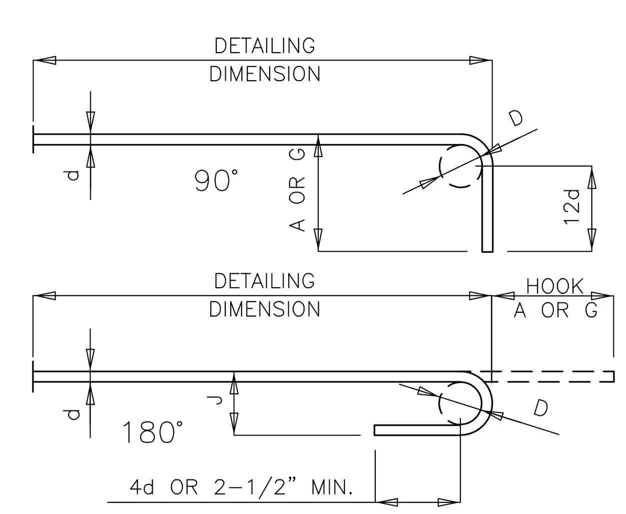

END HOOK DIMENSIONS				
BAR SIZE	D (IN.)	ALL GRADES 180° HOOKS A OR G	ALL GRADES 180° HOOKS J	ALL GRADES 90° HOOKS A OR G
#3	2-1/4"	5"	3"	6"
#4	3"	6"	4"	8"
#5	3-3/4"	7"	5"	10"
#6	4-1/2"	8"	6"	12"
#7	5-1/4"	10"	7"	14"
#8	6"	11"	8"	16"
#9	9-1/2"	15"	11-3/4"	19"
#10	10-3/4"	17"	13-1/4"	22"
#11	12"	19"	14-3/4"	2'-0"
#14	18-1/4"	2'-3"	21-3/4"	2'-7"

NOTE:
TWO ADDITIONAL BARS, OF EACH SIZE, ARE REQUIRED FOR TESTING BUT ARE NOT INCLUDED IN THE BAR BILL.
ALL STANDARD HOOKS AND BENDS OTHER THAN 180 DEG. TO BE BENT WITH THE SAME PROCEDURE AS FOR 90 DEG. STD. HOOKS.
HOOKS AND BENDS SHALL BE IN ACCORDANCE WITH THE PROCEDURES AS SHOWN ON THIS SHEET.
E = EPOXY COATED REINFORCEMENT
S = STIRRUP
X = BAR IS INCLUDED IN SUBSTRUCTURE QUANTITIES.
V = BAR DIMENSIONS VARY IN EQUAL INCREMENTS BETWEEN DIMENSIONS SHOWN ON THIS LINE AND THE FOLLOWING LINE.
NO. EA. = NUMBER OF BARS OF EACH LENGTH.
NOMINAL LENGTHS ARE BASED ON OUT TO OUT DIMENSIONS SHOWN IN BENDING DIAGRAMS AND ARE LISTED FOR FABRIATORS USE (NEAREST INCH).
ACTUAL LENGTHS ARE MEASURED ALONG CENTERLINE BAR TO THE NEAREST INCH.
PAYWEIGHTS ARE BASED ON ACTUAL LENGTHS.
FOUR ANGLE OR CHANNEL SPACERS ARE REQUIRED FOR EACH COLUMN SPIRAL. SPACERS ARE TO BE PLACED ON INSIDE OF SPIRALS. LENGTH AND MASS OF COLUMN SPIRALS DO NOT INCLUDE SPLICES OR SPACERS.
REINFORCING STEEL (GRADE 60) = FY 60,000 PSI.

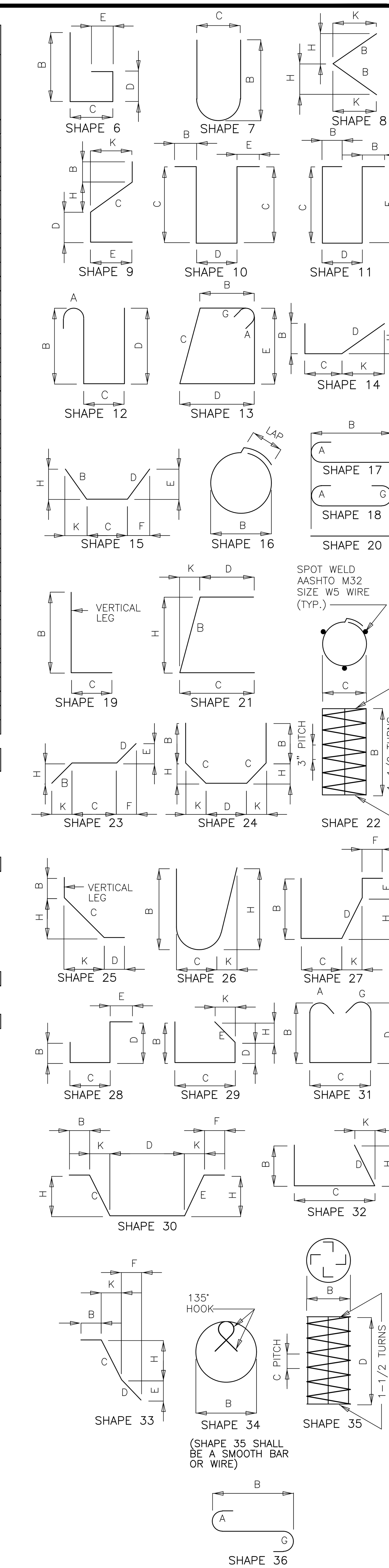

BENDING DIAGRAMS

ANDERSON ENGINEERING
EMPLOYEE OWNED
ENGINEERS • SURVEYORS • LABORATORIES • DRILLING

STATE OF MISSOURI ★ GARY D. STRACK NUMBER E-20915 PROFESSIONAL ENGINEER ★ 04/04/2022

NO.	DESCRIPTION	BY	DATE
REVISIONS			

DRAWING INFO.	
FIELD BY:	
DRAWN BY:	CAW
CHECK BY:	GDS
DATE:	10/29/2020
FIELD BOOK:	
JOB NUMBER:	20KC40008

©COPYRIGHT ANDERSON ENGINEERING, INC. 2012

BILL OF REINFORCING STEEL
RIDGEMONT DR. BRIDGE OVER COUNTY HOUSE BRANCH
SEC. 22 T48N, R13W
CITY OF COLUMBIA, MISSOURI

G:\My Drive\20kc40008 - ridgemont bridge\CADD\Plans\B_Bill of Reinforcing Steel

CURVE TABLE							
CURVE #	RADIUS	LENGTH	TANGENT	DELTA	CHORD DIRECTION	START POINT	END POINT
C1	333.00	60.24'	30.20	10°21'54"	S 74° 26' 20" E	STA: 8+91.25 (N: 1130243.11, E: 1677712.56)	STA: 9+51.49 (N: 1130226.97, E: 1677770.51)
C2	333.00	40.51'	20.28	6°58'13"	S 65° 46' 17" E	STA: 10+71.07 (N: 1130184.61, E: 1677882.33)	STA: 11+11.58 (N: 1130168.00, E: 1677919.25)

PROPERTY OWNERS				
TRACT	TOTAL ACREAGE	PROPOSED R.O.W.	T.C.E.	REMAINING ACREAGE
1	0.27	0.00	0.01	0.27

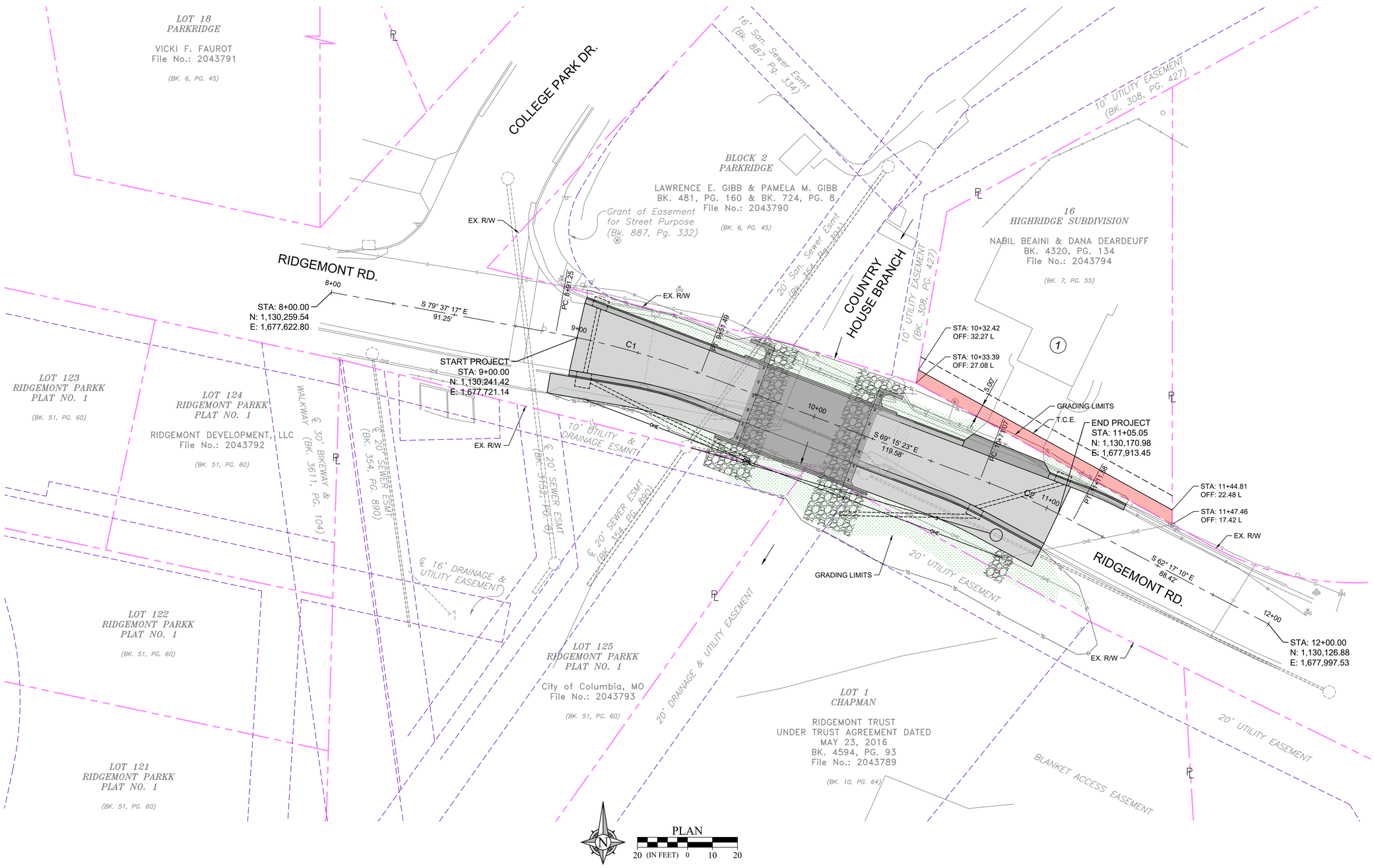

ANDERSON ENGINEERING
EMPLOYEE OWNED
ENGINEERS · SURVEYORS · LABORATORIES · DRILLING

STATE OF MISSOURI
GARY D. STRACK
NUMBER 2003022
PROFESSIONAL ENGINEER
04/04/2022

DRAWING INFO.

FIELD BY:	
DRAWN BY:	NDO/CAW
CHECK BY:	GDS
DATE:	10/21/2021
FIELD BOOK:	
JOB NUMBER:	20KC40008

REVISIONS

NO.	DESCRIPTION	BY	DATE

©COPYRIGHT ANDERSON ENGINEERING, INC. 2012

RIGHT-OF-WAY PLAN
RIDGEMONT DR. BRIDGE OVER
COUTNY HOUSE BRANCH
SEC. 22 T48N, R13W
CITY OF COLUMBIA, MISSOURI

SHEET NUMBER
24
OF 28

C:\Shared drives\KC\Columbia\20KC40008 Ridgemont Bridge\CADD\Field\R_Ridgeline\Ridgeline Plan

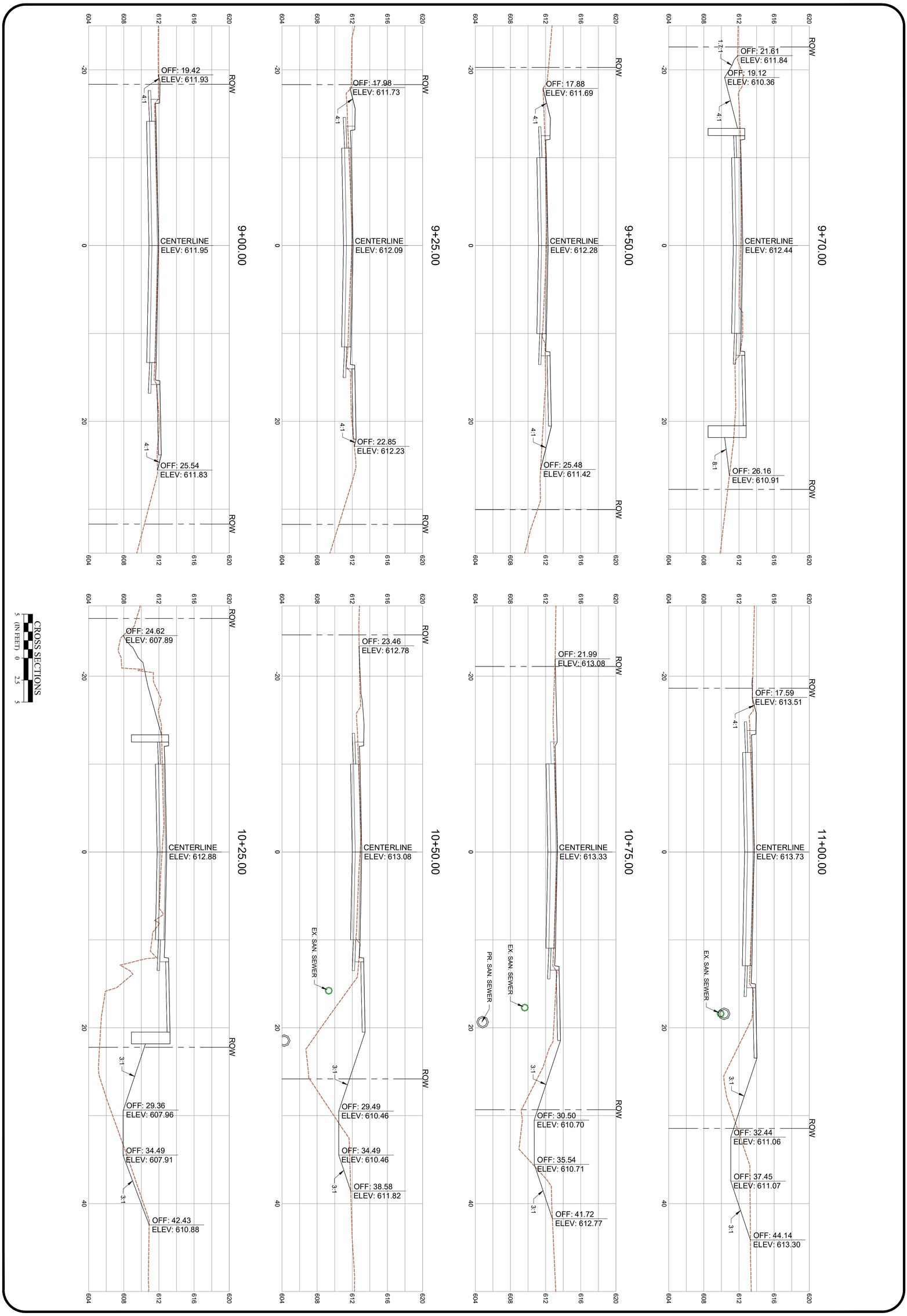

SHEET NUMBER
25
OF 28

CROSS SECTIONS

RIDGEMONT DR. BRIDGE OVER
COUTNY HOUSE BRANCH

SEC. 22 T48N, R13W
CITY OF COLUMBIA, MISSOURI

REVISIONS				DRAWING INFO.	
NO.	DESCRIPTION	BY	DATE	FIELD BY:	
				DRAWN BY:	NDO/CAW
				CHECK BY:	GDS
				DATE:	10/21/2021
				FIELD BOOK:	
				JOB NUMBER:	20KC40008

©COPYRIGHT ANDERSON ENGINEERING, INC. 2012

STATE OF MISSOURI
GARY D. STRACK
NUMBER E-20915
PROFESSIONAL ENGINEER
04/04/2022

ANDERSON ENGINEERING
EMPLOYEE OWNED
ENGINEERS • SURVEYORS • LABORATORIES • DRILLING

G:\Shared drives\40 MO\Columbia\20KC40008 Ridgemont Bridge\CADD\Plans\R_Cross Sections

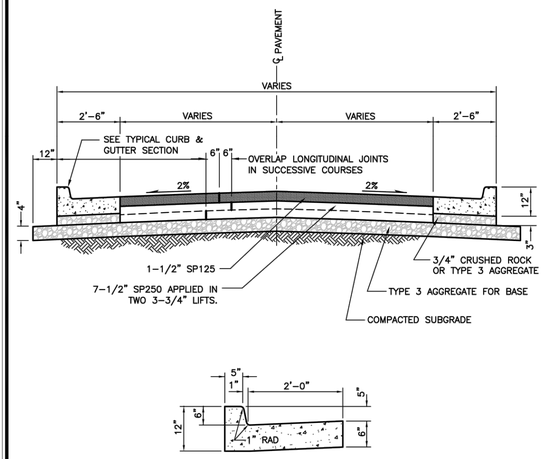

TYPICAL CURB AND GUTTER SECTION

NOTES:

1. ALL P.C. CONCRETE SHALL BE MoDOT PAVEMENT CONCRETE.
2. INSTALL 1/2" EXPANSION JOINTS IN CURB AND GUTTER SECTION AT P.C. AND P.T. OF CURB RADIUS OF INTERSECTIONS AND EVERY 150'.
3. INSTALL SAW JOINTS IN CURB AND GUTTER SECTION AT 10 FT. MAXIMUM SPACING, SEAL WITH BITUMASTIC JOINT SEALANT.
4. 4% PARABOLIC CROWN IS ACCEPTABLE IN LIEU OF 2% NORMAL CROWN.

Approved 10/01/16 Date
Revisions
City of Columbia Public Works Department

COLLECTOR STREET
(Asphaltic Pavement)

320.01

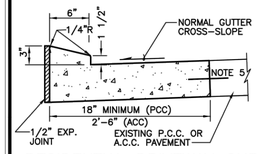

RESIDENTIAL DRIVEWAY CURB
MAXIMUM RISE (PREFERED)

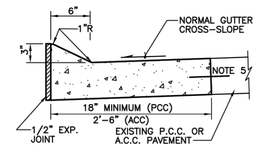

RESIDENTIAL DRIVEWAY CURB
MAXIMUM RISE (ALTERNATE)

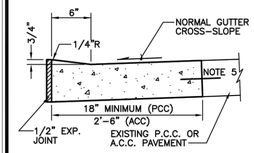

RESIDENTIAL DRIVEWAY CURB
MINIMUM RISE

GENERAL NOTES:

1. ELEVATION OF DRIVEWAY AT R.O.W. LINE REQUIRED TO BE A MINIMUM OF 6" ABOVE GUTTER ELEVATION. VERIFY R.O.W. WIDTH AND ALLOWABLE DRIVEWAY SLOPES PRIOR TO CONSTRUCTING MINIMUM RISE DRIVEWAY CURB.
2. ALTERNATE CURB PROFILES WHICH FALL WITHIN THE MINIMUM RISE AND MAXIMUM RISE CURBS SHOWN WILL BE APPROVED. SLOPE ACROSS RESIDENTIAL DRIVEWAY CURB TOP MUST BE AT LEAST 1/2" IN 6" TOWARD THE STREET.
3. HORIZONTAL SAWING OF CURB IS ALLOWED AS AN ALTERNATIVE TO REMOVING AND REPLACING STANDARD CURB. HORIZONTAL SAWING MACHINE AND METHOD REQUIRES PRIOR APPROVAL. HORIZONTAL SAWING IS NOT ALLOWED ON CITY BID PROJECTS.

PCC PAVEMENT NOTES:

1. CONCRETE SHALL BE MoDOT PAVEMENT CONCRETE.
2. PAVEMENT THICKNESS SHALL MATCH EXISTING. BASE SHALL MATCH EXISTING
3. EXPANSION JOINTS AND CONTRACTION JOINTS SHALL BE PLACED AT LOCATIONS SIMILAR TO THE PAVEMENT WHICH WAS REMOVED.
4. CURB EDGE SHALL BE TOOLED WITH 1/4" RADIUS
5. WHERE EXISTING PAVEMENT IS P.C.C., LOW CURB REPLACEMENT SHALL BE DOWELLED INTO EXISTING. 12" LONG #4 BARS AT 24" CTR. ALL DRILLED DOWEL BARS SHALL BE EXPOXIED.

ACC PAVEMENT NOTES:

1. CONCRETE SHALL BE MoDOT PAVEMENT CONCRETE.
2. GUTTER THICKNESS SHALL MATCH EXISTING, BASE SHALL MATCH EXISTING
3. EXPANSION JOINTS AND CONTRACTION JOINTS SHALL BE PLACED AT LOCATIONS SIMILAR TO THE CURB AND GUTTER WHICH WAS REMOVED.
4. CURB EDGE SHALL BE TOOLED WITH 1/4" RADIUS

Approved 10/01/16 Date
Revisions
City of Columbia Public Works Department

CURB DETAILS
(Residential Driveway)

400.02

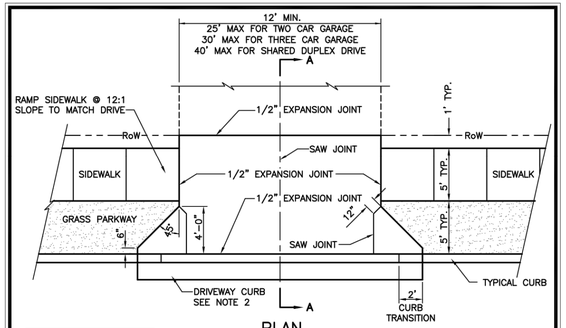

PLAN

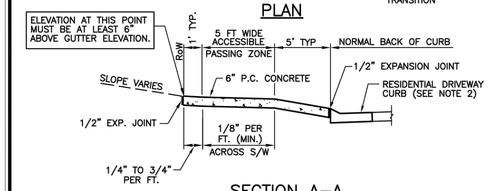

SECTION A–A

NOTES:

1. DRIVEWAY APPROACH SHALL BE 6" THICK MoDOT PAVEMENT CONCRETE ON COMPACTED SUBGRADE.
2. REPLACE STANDARD CURB & GUTTER SECTION WITH DRIVEWAY CURB SECTION. SEE DETAIL 400.02.
3. EXPANSION JOINT SHALL BE 1/2" PREFORMED CORK OR BITUMINOUS EXPANSION JOINT MATERIAL.
4. ALL DRIVEWAY APPROACHES SHALL SLOPE TOWARD THE STREET.
5. ALL DRIVEWAY APPROACHES SHALL BE CONSTRUCTED TO ACCOMMODATE SIDEWALKS. (EXISTING AND FUTURE) STANDARD SIDEWALK LOCATION IS 1 FT OFF OF RoW LINE
6. DRIVEWAY APPROACH SHALL PROVIDE A MINIMUM 5' WIDE ACCESSIBLE SIDEWALK PASSING ZONE.
7. DRIVEWAY SLOPE ACROSS ACCESSIBLE SIDEWALK PASSING ZONE IS 1/8" PER FT. CROSS SLOPE SHALL NOT EXCEED 2.00%.
8. MINIMIZE SIDEWALK WARPING ADJACENT TO DRIVEWAY APPROACH.
9. GREENSPACE SLOPE WITHIN RIGHT OF WAY SHALL NOT EXCEED 3/4" PER FOOT.
10. DRIVEWAY MAY BE REINFORCED AT OWNER'S OPTION. ON CITY BID PROJECTS DO NOT REINFORCE.
11. MEASURE FROM TOP OF CURB.

Approved 10/01/16 Date
Revisions
City of Columbia Public Works Department

DRIVEWAY
(Residential, 28' street)

410.02A

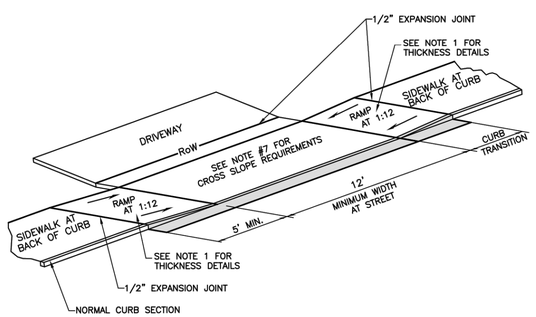

NOTE:

1. RAMP SHALL BE 6" THICK MoDOT PAVEMENT CONCRETE FOR RESIDENTIAL, 7" THICK MoDOT PAVEMENT CONCRETE FOR COMMERCIAL.
2. EXPANSION JOINT SHALL BE 1/2" PREFORMED CORK OR BITUMINOUS EXPANSION JOINT MATERIAL.
3. DRIVEWAY CROSS SLOPE SHALL NOT EXCEED 2.00%.
4. ALL SLOPES ARE MEASURED FROM THE HORIZONTAL.
5. REPLACE STANDARD CURB SECTION DRIVEWAY CURB SECTION – DETAIL 400.02 OR 400.03
6. RAMP LENGTH IS DEPENDENT UPON 1:12 MAX. SLOPE AT 5' MINIMUM TRANSITION AREA. USE FLATTER WHEN POSSIBLE.
7. A PEDESTRIAN ACCESSIBLE ROUTE SHALL BE PROVIDED THAT IS 4'–0" WIDE MINIMUM WITH A MINIMUM CROSS SLOPE OF 1/8" PER FOOT AND MAXIMUM CROSS SLOPE OF 2.00%.
8. DRIVEWAY MAY BE REINFORCED AT OWNERS OPTION. ON CITY BID PROJECTS DO NOT REINFORCE.

Approved 10/01/16 Date
Revisions
City of Columbia Public Works Department

SIDEWALK DRIVEWAY DETAIL
Sidewalk at Back of Curb

410.07

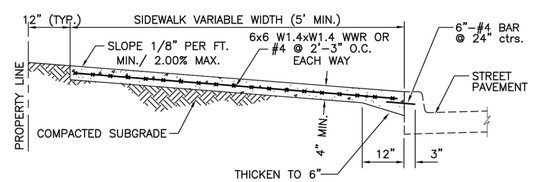

NOTE:

1. SIDEWALK SHALL BE 4" THICK MoDOT PAVEMENT CONCRETE.
2. INSTALL 1/2" TRANSVERSE EXPANSION JOINTS TO MATCH STREET OR CURB AND GUTTER EXPANSION JOINTS AND AT ALL DRIVEWAY APPROACHES, AND SIDEWALK RAMPS.
3. INSTALL TRANSVERSE SAW JOINTS AT SPACING EQUAL TO SIDEWALK WIDTH.
4. FOR DOWNTOWN SIDEWALK DETAIL SEE SECTION 1000.
5. NO STEEL TO BE PLACED THROUGH EXPANSION JOINT
6. SIDEWALK CROSS SLOPE SHALL NOT EXCEED 2.00%.
7. DAMAGED SIDEWALK MUST BE PINNED TO EXISTING SIDEWALK.
8. WWR OR REBAR SHALL BE ACCURATELY PLACED AND FIRMLY HELD IN PLACE DURING CONCRETE PLACEMENT BY APPROVED METHODS, SEE SECTION 238.9.

Approved 10/01/16 Date
Revisions
City of Columbia Public Works Department

SIDEWALK AT BACK OF CURB

420.02

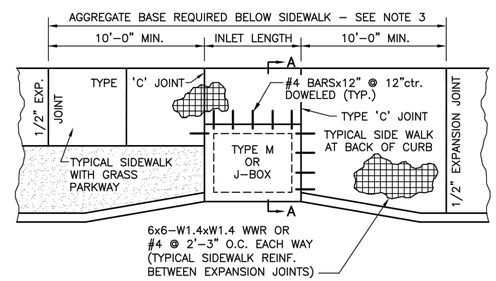

PLAN VIEW

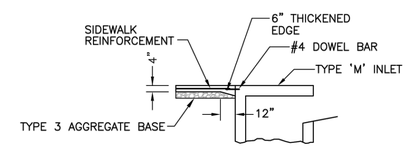

SECTION A–A

NOTES:

1. SIDEWALK SHALL BE 4" THICK MoDOT PAVEMENT CONCRETE
2. REINFORCING STEEL SHALL BE GRADE 60
3. 4" THICK PROPERLY PLACED TYPE 3 AGGREGATE BASE
4. ALL DRILLED DOWEL BARS SHALL BE EXPOXIED.

Approved 10/01/16 Date
Revisions
City of Columbia Public Works Department

SIDEWALK REINFORCEMENT AT DRAINAGE STRUCTURE

420.03

ANDERSON ENGINEERING
EMPLOYEE OWNED
ENGINEERS · SURVEYORS · LABORATORIES · DRILLING

STATE OF MISSOURI
GARY D. STRACK
NUMBER 2005022
04/04/2022
PROFESSIONAL ENGINEER

DRAWING INFO.

FIELD BY:	NDO/CAW
DRAWN BY:	GDS
CHECK BY:	
DATE:	10/21/2021
FIELD BOOK:	
JOB NUMBER:	20KC40008

REVISIONS

NO.	DESCRIPTION	BY	DATE

©COPYRIGHT ANDERSON ENGINEERING, INC. 2012

DETAILS
RIDGEMONT DR. BRIDGE OVER COUTNY HOUSE BRANCH
SEC. 22 T48N, R13W
CITY OF COLUMBIA, MISSOURI

SHEET NUMBER 26 OF 28

G:\Shared drives\0 MO\Columbia\20KC40008 Ridgemont Bridge\CADD\Transit_Details

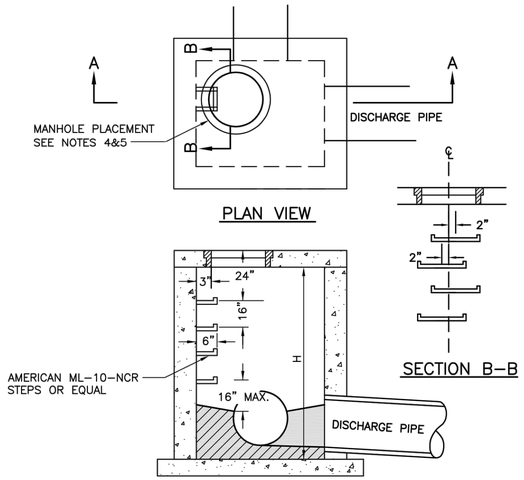

NOTES:

1. STEPS NOT REQUIRED WHERE H IS LESS THAN 4'.
2. STEPS SHALL BE ML–10–NCR OR EQUAL
3. STEPS SHALL BE PLACED ON VACANT WALL WHEN POSSIBLE
4. MANHOLE RING SHALL BE OFFSET TOWARD WALL WITH STEPS.
5. MANHOLE RING SHALL BE CENTERED ON CENTERLINE OF STEPS
6. STAGGER STEPS 2" EACH WAY FROM CENTERLINE OF MANHOLE RING.
7. TOP STEP 24" BELOW TOP OF SLAB
8. STEP SPACING TO BE 16", BOTTOM STEP TO BE NO HIGHER THAN 16" FROM INVERT.

Approved 10/01/16 Date	City of Columbia Public Works Department	DRAINAGE STRUCTURE STEPS	500.01
Revisions			

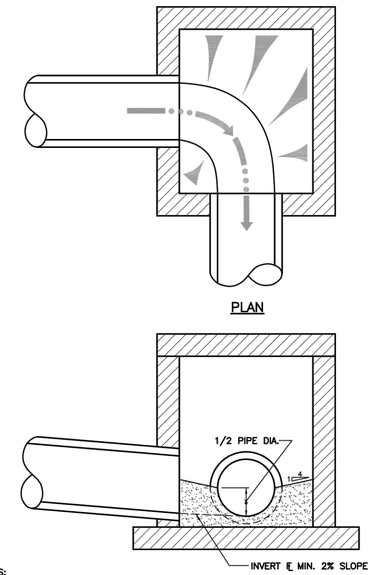

NOTES:

1. FORM ALL INVERTS FOR SMOOTH FLOW THRU STRUCTURE.
2. INVERT SHALL BE FORMED UP TO 1/2 THE PIPE DIAMETER.
3. INVERT SHALL BE CLASS E CONCRETE.

Approved 10/01/16 Date	City of Columbia Public Works Department	DRAINAGE STRUCTURE INVERT	500.02
Revisions			

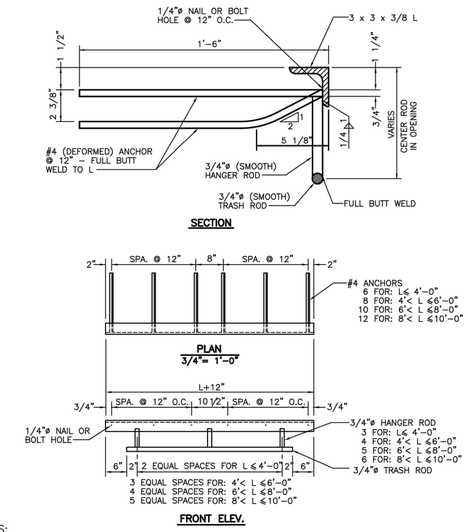

NOTES:

1. STRUCTURAL STEEL SHALL BE GRADE A–36
2. EXPOSED STEEL SURFACES TO BE FINISHED SMOOTH.
3. HOT DIP GALVANIZE ASSEMBLY. CHIPPING NOT REQUIRED ON ANCHOR WELDS.
4. NAILS OR BOLTS USED TO ANCHOR ANGLE ASSEMBLY TO FORM SHALL BE REMOVED OR CUT OFF FLUSH WITH SURFACE OF ANGLE. DO NOT MAR GALVANIZING.
5. DIMENSION "L" REPRESENTS THE INSIDE INLET DIMENSION.

Approved 10/01/16 Date	City of Columbia Public Works Department	INLET OPENING TRASH RACK	500.03
Revisions			

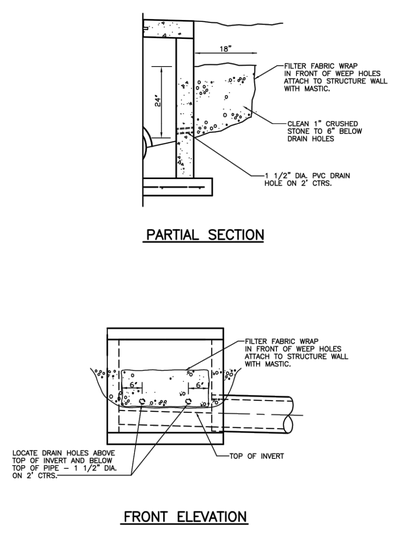

NOTE:

1. PLACE WEEP HOLES ON UPSTREAM FACE OF ALL STRUCTURES AND ALSO ON ROADWAY FACE OF CURB INLET STRUCTURES.
2. WEEP HOLE FILTER FABRIC SHALL CONSIST OF A NON–WOVEN, POLYPROPYLENE TYPE FABRIC SUCH AS: AMOCO 4553 NON–WOVEN GEOTEXTILE FABRIC OR APPROVED EQUAL.

Approved 10/01/16 Date	City of Columbia Public Works Department	DRAINAGE STRUCTURE WEEP HOLES	500.04
Revisions			

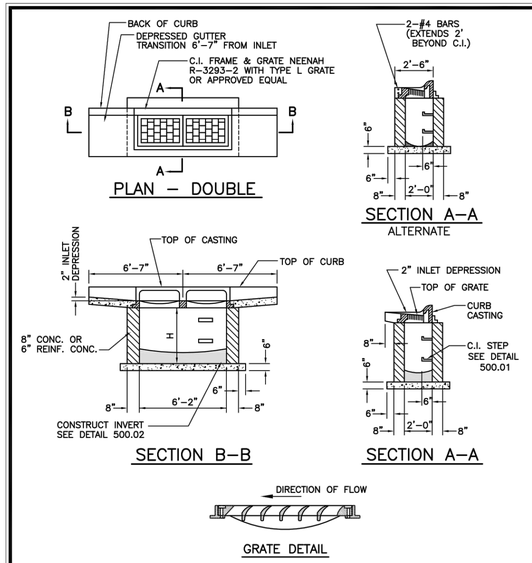

NOTES:

1. CONCRETE SHALL BE CLASS E FOR BASES AND D FOR WALLS AND TOP.
2. REINFORCING STEEL SHALL BE GRADE 60
3. INSTALL WEEP HOLES AS PER DETAIL 500.04
4. STRUCTURES WHERE H>8' SHALL BE REINFORCED CONCRETE (#4 BARS AT 12" CTRS, BOTH WAYS AND #4 BARS DIAGONAL AT PIPE OPENINGS)

Approved 10/01/16 Date	City of Columbia Public Works Department	DOUBLE TYPE "A" INLET	505.02B
Revisions			

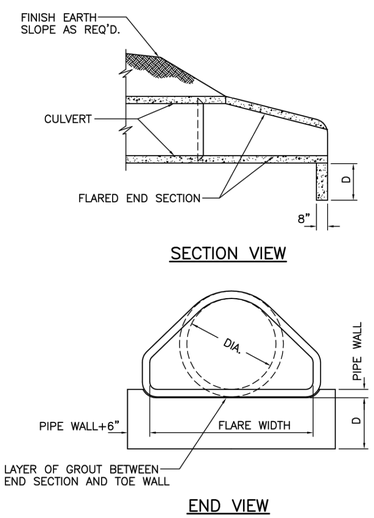

NOTE:

1. CONCRETE FOR TOE WALL SHALL BE CLASS E
2. D=18" FOR PIPES WITH INSIDE DIAMETER 21" OR LESS.
3. D=24" FOR PIPES WITH INSIDE DIAMETER FROM 24" TO 48".
4. D=36" FOR PIPES WITH INSIDE DIAMETER 54" OR MORE.

Approved 10/01/16 Date	City of Columbia Public Works Department	TOEWALL & END SECTION FOR RCP	525.01A
Revisions			

ANDERSON ENGINEERING
EMPLOYEE OWNED
ENGINEERS · SURVEYORS · LABORATORIES · DRILLING

STATE OF MISSOURI
GARY D. STRACK
NUMBER 34042022
PROFESSIONAL ENGINEER

DRAWING INFO.	
FIELD BY:	NDO/CAW
DRAWN BY:	GDS
CHECK BY:	
DATE:	10/21/2021
FIELD BOOK:	
JOB NUMBER:	20KC40008

REVISIONS		
NO.	DESCRIPTION	BY	DATE

©COPYRIGHT ANDERSON ENGINEERING, INC. 2012

DETAILS
RIDGEMONT DR. BRIDGE OVER
COUTNY HOUSE BRANCH
SEC. 22 T48N, R13W
CITY OF COLUMBIA, MISSOURI

SHEET NUMBER
27
OF 28

G:\Shared drives\AE\KC\Columbia\20KC40008 Ridgemont Bridge\CAD\Plans\B_Details

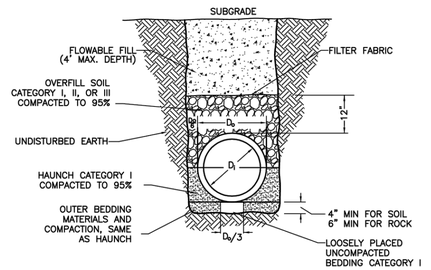

RIGID PIPE

PIPE DIAMETER	PAYLINE/ MIN. TRENCH WIDTH	MAX. TRENCH WIDTH
12"–36"	Do+12"	Do+24"
42"–72"	Do+(Do/3)	Do+30"
72"+	Do+(Do/3)	Do+48"

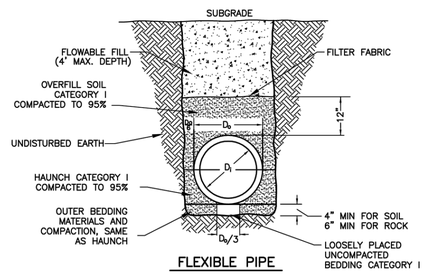

FLEXIBLE PIPE

Approved 10/01/16 Date

Revisions

City of Columbia Public Works Department

PIPE EMBEDMENT (In the Right of Way) | 540.01

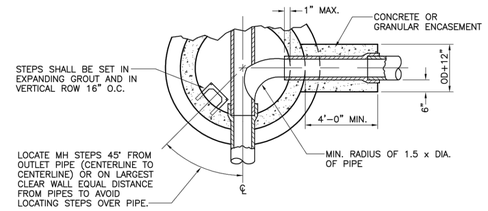

HORIZONTAL SECTION

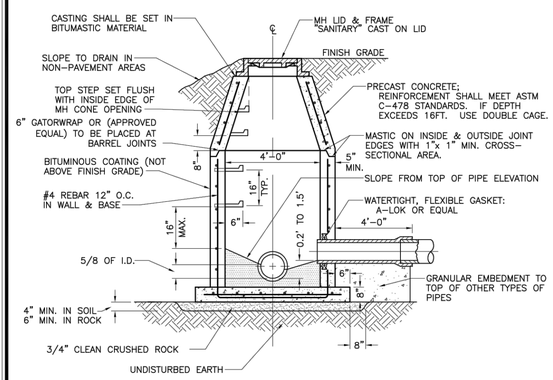

VERTICAL SECTION

Approved 10/01/16 Date

Revisions

City of Columbia Public Works Department

STANDARD MANHOLE | 1

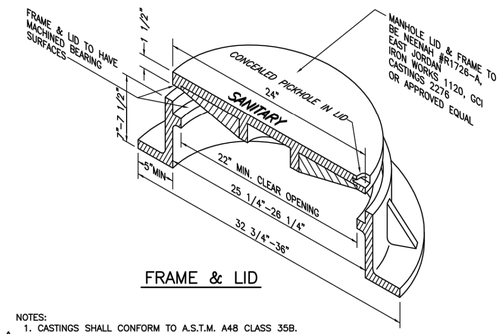

FRAME & LID

NOTES:
1. CASTINGS SHALL CONFORM TO A.S.T.M. A48 CLASS 35B.
2. LIDWEIGHT 135 lbs. ±5%. TOTAL WEIGHT OF 350 lbs. ±5%. ⚠
3. WATERTIGHT LID AND FRAME TO BE NEENAH #R-1916-F, OR APPROVED EQUAL
4. MANHOLE STEP NEENAH R-1980-J, CLAY & BAILEY 2102-01-6200 & 2102-01-6300, GCI MS 1114B OR APPROVED EQUAL.
5. BOLT DOWN LIDS SHALL HAVE FRAMES BOLTED TO THE CONE SECTION

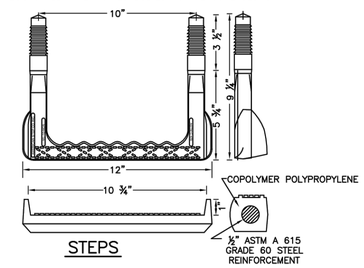

STEPS

Approved 10/01/16 Date

Revisions

⚠ Revised casting weight

City of Columbia Public Works Department

MANHOLE CASTINGS (Frame, Lid & Steps) | 8

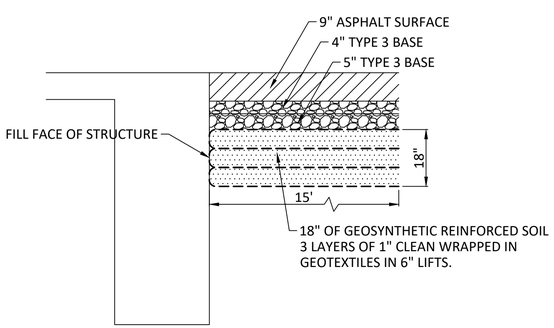

GRS DETAIL

ANDERSON ENGINEERING
EMPLOYEE OWNED
ENGINEERS · SURVEYORS · LABORATORIES · DRILLING

STATE OF MISSOURI
GARY D. STRACK
NUMBER 2012022
04/04/2022
PROFESSIONAL ENGINEER

DRAWING INFO.

FIELD BY:	NDO/CAW
DRAWN BY:	GDS
CHECK BY:	
DATE:	10/21/2021
FIELD BOOK:	
JOB NUMBER:	20KC40008

REVISIONS

NO.	DESCRIPTION	BY	DATE

©COPYRIGHT ANDERSON ENGINEERING, INC. 2012

DETAILS
RIDGEMONT DR. BRIDGE OVER COUTNY HOUSE BRANCH
SEC. 22 T48N, R13W
CITY OF COLUMBIA, MISSOURI

SHEET NUMBER 28 OF 28

G:\Shared drives\KC MO\Columbia\20KC40008 Ridgemont Bridge\CADD\Permit_Details